hp 175A

HEWLETT-PACKARD COMPANY / OPERATING AND SERVICE MANUAL

175A

OSCILLOSCOPE

hp 175A

OPERATING AND SERVICE MANUAL

MODEL 175A

SERIALS PREFIXED: 344-

OSCILLOSCOPE

Copyright HEWLETT-PACKARD COMPANY 1963
1501 PAGE MILL ROAD, PALO ALTO, CALIFORNIA, U.S.A.

01526-2

Printed: NOV 1963

TABLE OF CONTENTS

Section		Page
I	GENERAL INFORMATION	1-1
1-1.	Description	1-1
1-3.	Auxiliary Equipment	1-1
1-5.	Instrument Identification	1-1
1-7.	Warranty	1-1
1-9.	Special Features	1-4
1-11.	Cathode-Ray Tube	1-4
1-13.	Special Controls	1-4
1-15.	Amber Filter	1-4
II	INSTALLATION	2-1
2-1.	Incoming Inspection	2-1
2-2.	Mechanical Inspection	2-1
2-4.	Performance Check	2-1
2-6.	Installation	2-1
2-8.	Rack Mounting	2-1
2-10.	Cooling	2-1
2-13.	Power Requirement	2-1
2-15.	Safety Power Cable	2-1
2-17.	Repackaging for Shipment	2-1
III	OPERATION	3-1
3-1.	General	3-1
3-3.	Beam Finder	3-1
3-5.	Calibration	3-1
3-7.	Triggering	3-1
3-9.	Trigger Source	3-1
3-11.	Trigger Level	3-1
3-13.	Trigger Slope	3-1
3-15.	Sweep Mode	3-1
3-17.	Sweep Controls	3-1
3-18.	Sweep Time	3-1
3-20.	Sweep Magnifier	3-1
3-23.	Horizontal Functions	3-1
3-25.	Intensity Modulation	3-1
3-27.	Step-by-Step Procedures	3-1
IV	PRINCIPLES OF OPERATION	4-1
4-1.	Overall Function Description	4-1
4-9.	Vertical Amplifier	4-1
4-11.	Cross-Coupled Cathode Follower	4-2
4-13.	Differential Amplifier	4-2
4-15.	Peaking	4-2
4-17.	Sync Amplifier	4-2
4-19.	Delay Line	4-2
4-21.	Circuit Protection	4-2
4-23.	Scan Output	4-2
4-25.	Sweep Generator	4-2
4-27.	Trigger Generator	4-2
4-30.	Sweep Generating Circuits	4-3
IV	PRINCIPLES OF OPERATION (Cont'd)	
4-38.	Single-Sweep Operation	4-4
4-40.	Schmitt Trigger Circuit	4-4
4-43.	Horizontal Amplifier	4-5
4-47.	High-Voltage Power Supply	4-6
4-51.	Intensity Control	4-6
4-53.	Trace Alignment Control	4-6
4-55.	Low-Voltage Power Supplies	4-6
V	MAINTENANCE	5-1
5-1.	Introduction	5-1
5-3.	Servicing the Air Filter	5-1
5-5.	Performance Check	5-1
5-7.	Test Equipment	5-1
5-9.	Preliminary Settings	5-1
5-11.	Horizontal Amplifier	5-1
5-14.	Sweep Generator	5-2
5-20.	Vertical Amplifier Bandwidth	5-3
5-21.	Calibrator	5-4
5-22.	Intensity Modulation	5-4
5-23.	Sweep and Gate Output (Optional Feature)	5-4
5-24.	Accessory Probes	5-4
5-25.	Adjustments	5-4
5-27.	Equipment Needed for Adjustments	5-4
5-29.	Location of Adjustments	5-4
5-31.	Preliminary Settings	5-4
5-33.	Low-Voltage Power Supplies	5-5
5-35.	High-Voltage Power Supply	5-5
5-40.	Horizontal Amplifier	5-8
5-47.	Sweep Generator	5-10
5-53.	Vertical Amplifier	5-11
5-58.	Calibrator	5-12
5-59.	Repairs	5-12
5-61.	Equipment Required	5-13
5-64.	Procedure	5-13
5-67.	Troubleshooting	5-13
5-68.	Isolating Troubles to a Major Section	5-13
5-70.	Low-Voltage Power Supplies	5-13
5-77.	High-Voltage Power Supply	5-16
5-81.	Vertical Amplifier	5-16
5-87.	Sweep Generator	5-17
5-93.	Horizontal Amplifier	5-18
5-99.	Cathode Ray Tube Replacement	5-18
VI	REPLACEABLE PARTS	6-1
6-1.	Introduction	6-1
6-4.	Ordering Information	6-1

LIST OF ILLUSTRATIONS

Number	Title	Page
1-1.	Model 175A Oscilloscope with accessories furnished	1-0
1-2.	Cathode-Ray Tube Warranty	1-2
3-1.	Description of Front-Panel Controls and Connectors	3-0
3-2.	Internal Sweep	3-2
3-3.	Magnified Sweep	3-3
3-4.	Probe Compensation	3-4
3-5.	Intensity Modulation	3-5
4-1.	Overall Block Diagram of Model 175A with Model 1750A Plug-In Unit	4-0
4-2.	Vertical Amplifier Block Diagram	4-1
4-3.	Cross-Coupled Cathode Follower Simplified Schematic Diagram	4-2
4-4.	Sweep Generator Block Diagram	4-3
4-5.	Trigger Generator Simplified Circuit and Composite Characteristic	4-4
4-6.	Simplified Schmitt Trigger Circuit	4-5
4-7.	Horizontal Amplifier Block Diagram	4-5
4-8.	High-Voltage Power-Supply Block Diagram	4-6
4-9.	Low-Voltage Power-Supply Block Diagram	4-7
5-1.	Test Plug	5-5
5-2.	Adjustments and Component Locations, Top View	5-6
5-3.	Adjustments and Component Locations, Bottom View	5-7
5-4.	Pattern Adjustment	5-8
5-5.	Frequency Compensation	5-9
5-6.	Attenuator Compensation	5-10
5-7.	Trigger Sensitivity	5-10
5-8.	Scan Balance	5-11
5-9.	Mid-Frequency Response Preliminary Adjustment	5-12
5-10.	Mid-Frequency Response Final Adjustment	5-12
5-11.	High-Frequency Response	5-12
5-12.	Model 175A Component Locations, Top View	5-21
5-13.	Model 175A Component Locations, Bottom View	5-22
5-14.	Model 175A Component Locations, Right Side View	5-23
5-15.	Model 175A Component Locations, Left Side View	5-23
5-16.	A1 Vertical-Input Assembly Component Locations	5-25
5-17.	A2 Vertical-Output Assembly Component Locations	5-26
5-18.	Vertical Amplifier (schematic diagram)	5-27
5-19.	A101 Sweep-Generator Assembly Component Locations	5-28
5-20.	A102 Trigger-Source Switch Assembly, Mounted Components	5-28
5-21.	A103 Trigger-Level and -Slope Switch Assembly, Mounted Components	5-28
5-22.	Sweep Generator (schematic diagram)	5-29
5-23.	A1001 Sweep-Switch Circuit Board Component Locations	5-30
5-24.	A1002 Sweep-Time Switch Assembly, Mounted Components	5-30
5-25.	Sweep-Time Switch (schematic diagram)	5-31
5-26.	A201 Horizontal Amplifier Assembly Component Locations	5-32
5-27.	A202 Horizontal Display Switch Assembly, Mounted Components	5-32
5-28.	Horizontal Amplifier (schematic diagram)	5-33
5-29.	A301 High-Voltage and Calibrator Assembly Component Locations	5-34
5-30.	A302 High-Voltage Deck Assembly Component Locations	5-34
5-31.	High-Voltage Power Supply and Calibrator (schematic diagram)	5-35
5-32.	A401 Low-Voltage Power Supply Component Locations	5-36
5-33.	Low-Voltage Power Supply (schematic diagram)	5-37
5-34.	Heater Circuit (schematic diagram)	5-38
5-35.	A701 Gate- and Sweep-Output Assembly Component Locations	5-38
5-36.	Gate and Sweep Output (schematic diagram)	5-38
5-37.	Connectors	5-39

LIST OF TABLES

Number	Title	Page
1-1.	Specifications	1-1
1-2.	Plug-In Units and Accessories	1-3
5-1.	Test Equipment for Checks and Adjustments	5-0
5-2.	Sweep Calibration	5-3
5-3.	Power Supply Tolerances	5-5
5-4.	Sweep Time	5-11
5-5.	Troubleshooting the Low-Voltage Supply	5-14
5-6.	Vertical Amplifier Troubleshooting	5-17
5-7.	Sweep Generator Troubleshooting Guide	5-17
5-8.	Horizontal Amplifier Troubleshooting	5-18
5-9.	Condensed Adjustment Procedure	5-19
6-1.	Index by Reference Designator	6-2
6-2.	Replaceable Parts	6-22

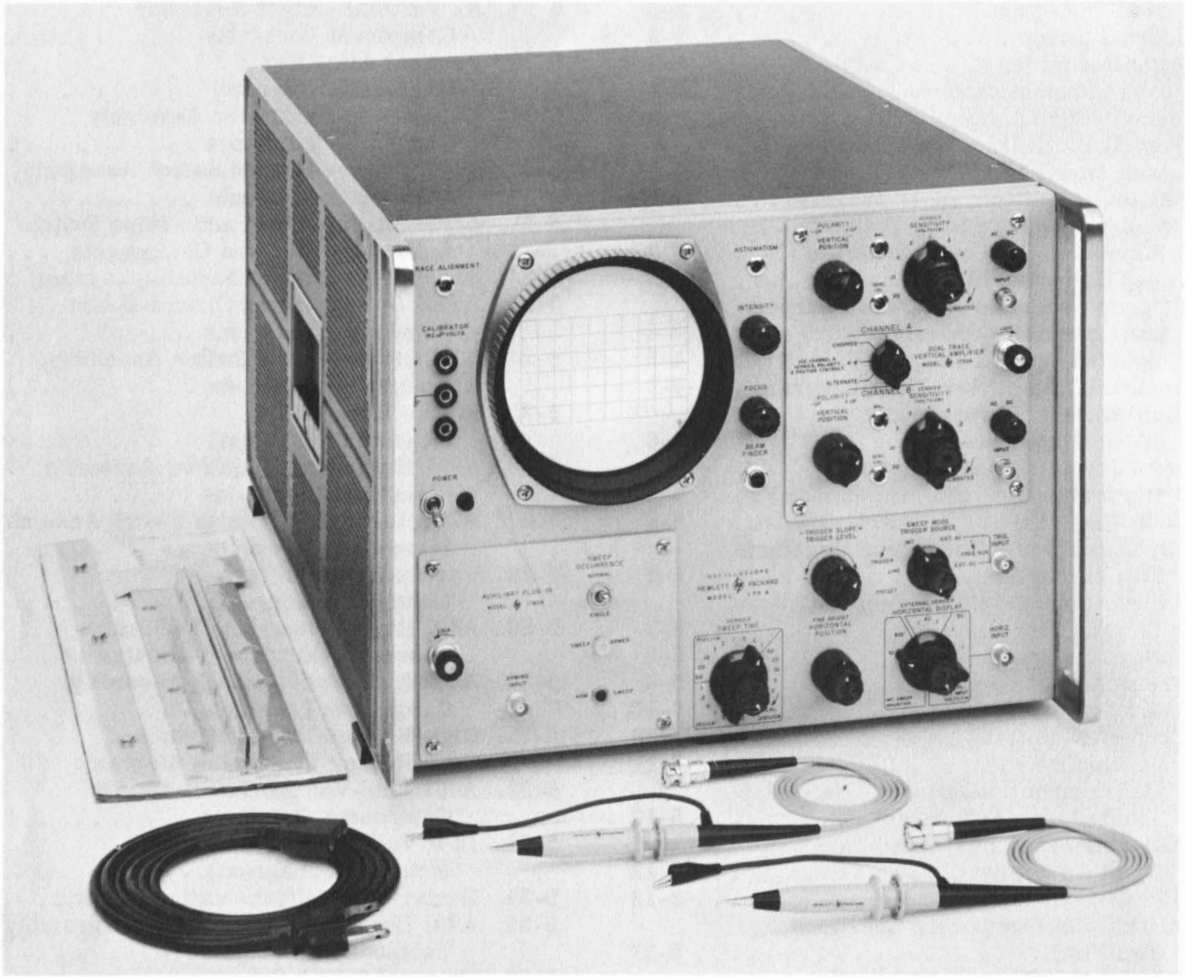

Figure 1-1. Model 175A Oscilloscope with accessories furnished (Model 1750A and Model 1780A Plug-In Units available separately)

SECTION I
GENERAL INFORMATION

1-1. DESCRIPTION.

1-2. The ⓗⓟ Model 175A Oscilloscope is a calibrated general-purpose test instrument with a vertical bandwidth of 50 megacycles and a 6 x 10 cm display. Optional plug-in units and accessories are available to increase the versatility of this instrument. Specifications are listed in Table 1-1.

1-3. AUXILIARY EQUIPMENT.

1-4. Available plug-in units and accessories are listed in Table 1-2.

a. Plug-ins. Plug-in units for the Model 175A include vertical amplifiers which collectively cover 5 mv/cm to 20 v/cm sensitivities and dc to 50-mc bandwidth. Horizontal units include single, sweep, sweep delay, a time-mark generator, and a display scanner.

b. Accessories. Each oscilloscope is supplied with two Model 10003A (AC-21M) high-impedance probes and a detachable power-cable.

1-5. INSTRUMENT IDENTIFICATION.

1-6. Hewlett-Packard uses a two-section eight-digit serial number (000-00000). If the first three digits of the serial number on your instrument do not agree with those on the title page of this manual, change sheets supplied with the manual will define differences between your instrument and the Model 175A described in this manual.

1-7. WARRANTY.

1-8. Both the cathode-ray tube (crt) and the Model 175A carry Hewlett-Packard warranties. The crt warranty is illustrated in figure 1-2, and a copy is included at the back of this manual for your use in the event of tube failure within the warranty period. Model 175A warranty is also at the back of this manual.

Table 1-1. Specifications

SWEEP GENERATOR

Range: 0.1 μsec/cm to 5 sec/cm in 1, 2, 5 sequence, 24 steps. Vernier provides continuous adjustment between ranges and extends slowest sweep to at least 12.5 sec/cm.

Magnification: X10

Accuracy: ±3%, ±5% with X10 magnifier.

Triggering: Internal, ac coupled; power line; external, ac or dc coupled.

Triggering Sensitivity:
Internal, approximately 2 mm vertical deflection at 1 mc, 2 cm at 50 mc.
External, approximately 0.25 volt peak-to-peak at 1 mc, approximately 0.5 volt peak-to-peak at 50 mc.

Triggering Point: Controls allow selection of level and slope.

HORIZONTAL AMPLIFIER

Bandwidth: DC coupled, DC to 500 kc; AC coupled, 2 cps to 500 kc.

Sensitivity: 2 ranges; 0.1 volt/cm and 1 volt/cm, accuracy ±5%. Vernier provides continuous adjustment between the ranges and extends minimum sensitivity to 10 volts/cm.

Input Impedance: 1 megohm shunted by approx 30 pf.

MAIN VERTICAL AMPLIFIER

Rise Time: Less than 7 nsec.

CALIBRATOR

Type: 1 kc square wave, approx 3 μsec rise time.

Voltage: 2 ranges, 1v and 10v peak-to-peak ±1% at 15°C to 35°C ambient, ±3% 0°C to 55°C ambient.

CATHODE RAY TUBE AND CONTROLS

Type: Post accelerator, 12 kv accelerating potential, ⓗⓟ Type G205. P31 aluminized phosphor standard, other phosphor available are P2, P7, and P11.

Graticule: Internal, parallax free 6 x 10 cm, marked in cm squares. 2-mm subdivision on major axis.

Intensity Modulation: Approximately +20-volt pulse will blank trace of normal intensity (BNC connector on rear panel).

GENERAL

Power: 115 or 230 v ±10% 50 to 60 cps. 425 watts max, (depends on plug-ins used).

Diminsions: 16-3/4 inches wide, 12-1/4 inches high, 24-3/8 inches deep overall; hardware furnished for quick conversion to 12-1/4-inch x 9-inch rack mount, 22 inches deep behind panel.

Weight: Net approximately 70 lb maximum (depends on plug-ins used).

Accessories Furnished:
Two 10003A (AC-21M), 10:1 voltage divider probes; one detachable power cable; rack mounting kit.

Table 1-1. Specifications (Cont'd)

Accessories Available:
- hp 10175A 10175B (AC-83A) Viewing Hood
- hp Model 196B Oscilloscope Camera, includes ultraviolet light source for illuminating the graticule and pre-sensitizing film.
- hp Model 1115A, 1116A, 1117A Testmobile

Plug-In Vertical Amplifiers:
- hp Model 1750A Dual Trace Vertical Amplifier, dc to 40 mc.
- hp Model 1751A Single Channel Vertical Amplifier dc to 50 mc.
- hp Model 1752A High Gain Vertical Amplifier, dc to 22 mc.
- hp Model 1752B High Gain Vertical Amplifier, dc to 40 mc.
- hp Model 1754A Four Channel Amplifier, dc to 40 mc.

Plug-In Horizontal Time Base Units:
- hp Model 1780A Auxiliary Plug-In
- hp Model 1781B Sweep Delay Generator
- hp Model 1782A Display Scanner
- hp Model 1783A Time-Mark Generator

OPTIONS

08. Sawtooth Output (approximately -2.5 volts to +2.5 volts) and Gate Output (+5-volt pulse nominal, riding on a -2.5 volt level).

hp

CATHODE RAY TUBE WARRANTY

The cathode ray tube supplied in your Hewlett-Packard Oscilloscope and replacement cathode ray tubes purchased from hp, are guaranteed against electrical failure for one year from the date of sale by the Hewlett-Packard Company. Broken tubes or tubes with burned phosphor are not included in this guarantee.

Your local Hewlett-Packard representative maintains a stock of replacement tubes and will be glad to process your warranty claim for you. Please consult him.

Whenever a tube is returned for a warranty claim, the reverse side of this sheet must be filled out in full and returned with the tube. Follow shipping instructions carefully to insure safe arrival, since no credit can be allowed on broken tubes.

SHIPPING INSTRUCTIONS

1) Carefully wrap the tube in 1/4" thick cotton batting or other soft padding material.
2) Wrap the above in heavy kraft paper.
3) Pack in a rigid container which is at least 4 inches larger than the tube in each dimension.
4) Surround the tube with at least four inches of packed excelsior or similar shock absorbing material. Be certain that the packing is tight all around the tube.
5) Tubes returned from outside the continental United States should be packed in a wooden box.
6) Ship prepaid preferably by AIR FREIGHT or RAILWAY EXPRESS. We do not recommend parcel post or air parcel post shipment.

HEWLETT-PACKARD CO. PAGE MILL ROAD, PALO ALTO, CALIF. U.S.A.

CRT WARRANTY CLAIM

FROM: DATE: _____

NAME: _____

COMPANY: _____

ADDRESS: _____

Person to contact for further information:

NAME: _____

TITLE: _____

COMPANY: _____

ADDRESS: _____

To process your claim quickly please enter the information indicated below:

1) hp INSTRUMENT MODEL _____ SERIAL _____
2) TUBE TYPE _____ SERIAL _____
3) ORIGINAL TUBE _____ REPLACEMENT TUBE _____
4) YOUR PURCHASE ORDER NO. _____
5) DATE PURCHASED _____
6) PURCHASED FROM _____
7) COMPLAINT: (Please describe nature of trouble) _____
8) OPERATING CONDITIONS: (Please describe conditions prior to and at time of failure _____

SIGNATURE _____

Figure 1-2. Cathode-Ray Tube Warranty

Table 1-2. Plug-In Units and Accessories

hp Model	Name	Description
1750A	Dual Trace Vertical Amplifier	Dual-trace and differential display, 0.05 v/cm to 20 v/cm sensitivity, less than 9-nsec rise time, dc to 40 mc bandwidth
1751A	Single Channel Amplifier	DC to 50 mc bandwidth, less than 7-nsec rise time, 0.05 v/cm to 20 v/cm sensitivity
1752A	High Gain Vertical Amplifier	Single channel or dual-input differential display, 5 mv/cm to 20 v/cm sensitivity, dc to 18 mc bandwidth from 5 mv/cm to 20 mv/cm range, dc to 22 mv bandwidth from 50 mv/cm to 20 v/cm range.
1752B	High Gain Vertical Amplifier	Single channel or dual-input differential display, 5 mv/cm to 20 v/cm sensitivity, dc to 40 mc bandwidth in normal mode, dc to 30 mc bandwidth in X10 mode.
1754A	Four Channel Amplifier	Single or multiple channel operation, 50 mv/cm to 20 v/cm sensitivity, dc to 40 mc bandwidth, less than 9-nsec rise time.
1780A	Auxiliary Plug-In	Single or normal sweep, manual or external arming.
1781B	Sweep Delay Generator	0 to 10 cm of sweep delay. Will trigger or arm main sweep. Display controlled by main sweep or delaying sweep for all part of trace. Delaying sweep rate 2 μsec/cm to 1 sec/cm.
1782A	Display Scanner	Provides output to operate conventional X-Y recorder. Includes pen-stabilizer for nearly constant writing rate. At least 30-mc bandwidth with 40 mc vertical plug-in unit.
1783A	Time Mark Generator	Provides intensity modulating time markers synchronized with sweep. Marker intervals 0.1, 1, or 10 μsec.
196B	Oscilloscope Camera	Makes permanent record of oscilloscope trace on quick-developing Polaroid-Land film. Clamps quickly to oscilloscope bezel. Oscillo-Reptar fully corrected f/1.9 lens. Alphax #3 shutter, 1/100 to 1 second. Includes ultraviolet light silhouette internal graticule of crt. Model 10351A Carrying Case available.
1115A 1116A 1117A	Testmobile	Holds oscilloscope in convenient position for viewing display. Tilts instrument so that display can be viewed from various angles.
10035A	Tip Assortment Kit	Kit contains a pincer jaw, banana tip, pin tip, hook tip, and sprint tip and provides maximum versatility when used with 10002A/B or 10003A/B Probes
10175A/B (AC-83A)	Viewing Hood	Shades crt screen from surrounding light sources. Model 10175A had polarized light filter.
10003A/B (AC-21M)	Voltage Probe (2 supplied with Model 175A Oscilloscope)	High-impedance test probe with flange-operated jaws and approximately 4 feet of shielded cable matched to oscilloscope input. Division ratio 10:1 input impedance approximately 10 megohms shunted by 10 pf. Maximum voltage rating 600 volts peak.
10002A/B (AC-21C)	Voltage Probe	High-impedance test probe with flange-operated jaws and approximately 5 feet of shielded cable matched to oscilloscope input. Division ratio 50:1 input impedance approximately 9 megohms shunt by approximately 2.5 pf. Maximum voltage rating 1000 volts peak.
10025A (AC-21J)	Low Frequency Probe	Provides straight-through connector to oscilloscope from circuit test points. Pushbutton operated jaws. Shunt capacity approximately 150 pf. Cable approximately 5 feet long. Requires BNC to binding post adapter Model 10110A or equivalent.

1-9. SPECIAL FEATURES.

1-10. Special features of the Model 175A include the Hewlett-Packard internal-graticule crt, PRESET triggering, BEAM FINDER, and a cabinet which serves both bench- and rack-mount requirements. Optional plug-in units are provided for both the vertical and the time axis. The main vertical amplifier rise time is less than 7 nanoseconds which provides maximum versatility for present and future plug-ins.

1-11. CATHODE-RAY TUBE.

1-12. The crt used in the Model 175A is a multi-grid 12-kv post-accelerator type with the ⓗⓟ internal graticule which eliminates parallax, and an aluminized phosphor. The gun structure provides a large 6 x 10 cm distortionless viewing area as well as extremely high deflection-plate sensitivity.

1-13. SPECIAL CONTROLS.

1-14. Special panel controls make the Model 175A easy to operate. With SWEEP MODE in PRESET, the sweep will synchronize internally on nearly all signals. BEAM FINDER enables the operator to locate the beam when it is off screen. SWEEP MAGNIFIER increases the maximum sweep rate to 10 nsec/cm, calibrated in all positions.

1-15. AMBER FILTER.

1-16. An amber filter (ⓗⓟ Stock No. 120A-83A) is supplied with each oscilloscope which has a type P7 phosphor crt. The filter, when installed over the face of the crt, improves visual observation of displays such as single-shot phenomena or very low frequency applications. The filter provides the long persistency characteristics desired for observation of displays of this type. To install the filter, proceed as follows:

a. Remove front panel crt bezel.

b. Set filter into bezel, aligning larger rectangular slots in edge of filter with guide metal posts on bezel casting.

c. Remove oscilloscope top cover.

d. Loosen clamp at socket of crt.

e. Carefully push CRT toward rear of instrument to provide clearance for thickness of installed filter (about 1/8 inch).

f. Replace bezel with filter and tighten bezel screws.

g. Slide crt forward until light mask on front of crt just touches filter.

h. Tighten clamp to keep crt from turning; do not over-tighten clamp or tube damage may result.

i. Obtain a free running trace and then adjust TRACE ALIGNMENT until trace is aligned with horizontal lines of graticule.

SECTION II
INSTALLATION

2-1. INCOMING INSPECTION.

2-2. MECHANICAL INSPECTION.

2-3. Upon receipt of your Model 175A, check the contents of the shipment against the packing list and inspect the instrument for any obvious damage received in transit. See warranty sheet at the back of this manual. Keep the packing material until performance check has been successfully completed.

2-4. PERFORMANCE CHECK.

2-5. Check the performance of the Model 175A by making the tests outlined in paragraph 5-5 of this manual. Use this check to verify all listed specifications and also as part of an incoming quality-control inspection. Instructions for the plug-in units will be found in the individual manuals for these instruments.

2-6. INSTALLATION.

2-7. The Model 175A is packaged in the new Hewlett-Packard cabinet, suitable for bench or rack mount. Top and bottom covers may be removed for easy accessibility to internal parts and adjustments.

2-8. RACK MOUNTING.

2-9. Parts necessary for rack mounting are packaged with the instrument. Proceed as follows:

a. Remove tilt stand.

b. Remove feet (press foot-release button).

c. Remove adhesive-backed trim strip from sides.

d. Attach filler strip along bottom edge of front panel.

e. Attach mounting flanges to sides with larger notch toward bottom of instrument.

f. Mount in standard 19-inch rack (mounting screws not supplied).

Note

Rear support must be supplied to the rack-mounted instrument if it is to be subjected to mechanical vibrations.

2-10. COOLING.

2-11. The air filter in this instrument must receive an oil coat before the instrument is placed in normal use to prevent excessive dirt from entering instrument case. Recommended is Research Products Company No. 3 Filter Coat. This adhesive is available in "Handi-Koter" sprayer cans at most heating-supply stores or through your Hewlett-Packard field sales engineer.

2-12. The cooling fan and air filter are located at the rear of the Model 175A. Leave at least two inches of clearance behind the instrument for the free movement of air. In rack installations be sure that the recirculation of warm air within the rack cabinet does not result in high ambient temperature. Inspect the air filter periodically and clean it as soon as it appears to be reducing the flow of cooling air. See section V for cleaning instructions.

2-13. POWER REQUIREMENT.

2-14. The Model 175A operates on 115 or 230 volts ±10%, 50 to 60 cps. Power required depends upon the plug-ins used, but will not exceed approximately 425 watts. Before connecting the instrument to the power source, be sure that the 115-230 switch on the rear panel is in the correct position, and that the proper fuse is installed (see section VI).

CAUTION

Connecting to a 230-volt source with the switch in the 115-volt position can result in damage to the instrument.

2-15. SAFETY POWER CABLE.

2-16. To protect operating personnel the National Electrical Manufacturers' Association (NEMA) recommends that the instrument panel and cabinet be grounded. This instrument is equipped with a three-conductor power cable which grounds the instrument when plugged into an appropriate outlet. The offset round pin on the power-cable three-prong connector is the ground pin. To preserve the protection feature when operating the instrument from a two-contact outlet, use a three-prong to two-prong adapter and connect the green pigtail on the adapter to ground.

2-17. REPACKAGING FOR SHIPMENT.

2-18. To repack the Model 175A for shipment, always use the best packaging methods available. If the original container with its packing pads and fillers is not on hand, consult your nearest Hewlett-Packard sales office for packing materials or instructions. The following steps are a general guide:

a. Wrap the instrument in heavy paper.

b. Protect the panel with cardboard strips.

c. Use a strong cardboard or wooden box.

d. Use ample packing material around all sides of the instrument.

e. Seal with heavy tape or metal bands.

f. Mark the container "Fragile - Delicate Instrument".

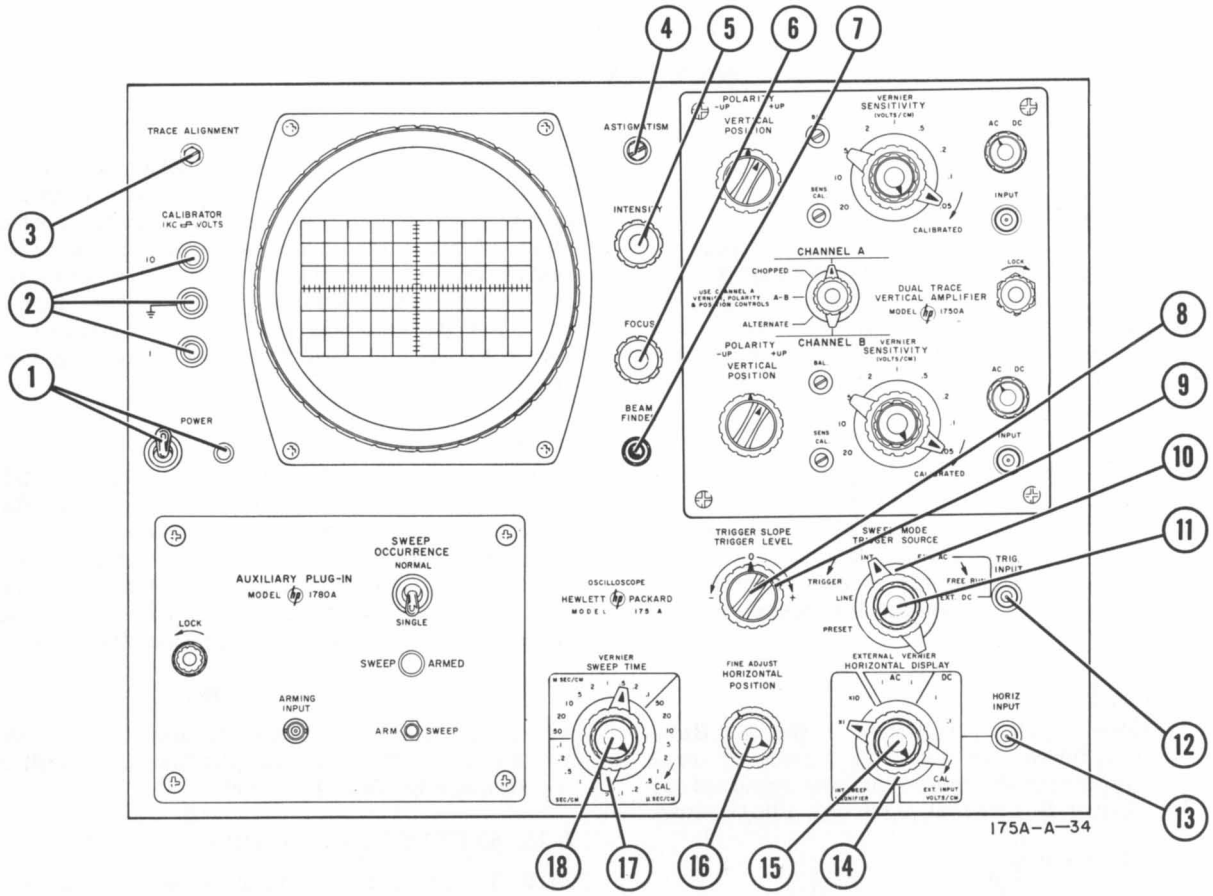

1. POWER switch and indicator light. The 115-230-volt switch is located on rear panel.
2. CALIBRATOR. Provides 1-volt and 10-volt square waves for calibration purposes.
3. TRACE ALIGNMENT. Rotates traces to align it with horizontal lines of graticule.
4. ASTIGMATISM. Used in conjunction with FOCUS to adjust sharpness of trace (adjusted for round dot).
5. INTENSITY. Adjust brightness of trace. An intensity-modulation input and switch are located on rear panel.
6. FOCUS. Adjusts sharpness of trace (adjusted for a sharp dot).
7. BEAM FINDER. Locates trace when off screen.
8. TRIGGER SLOPE. Permits triggering sweep on either positive- or negative-going slope of trigger-source waveform.
9. TRIGGER LEVEL. Adjust point on trigger-source waveform at which triggering occurs.
10. TRIGGER SOURCE. Selects source of trigger for sweep (power LINE, INTernal, EXTernal AC, or EXTernal DC).
11. SWEEP MODE. Selects triggered or free-running sweep. A detent (PRESET) position provides stable triggering with most signals.
12. TRIG. INPUT. For external triggering signal.
13. HORI. INPUT. For external horizontal signal.
14. HORIZONTAL DISPLAY. Selects source of horizontal signal and horizontal sensitivity, including SWEEP MAGNIFIER X10.
15. EXTERNAL VERNIER. Adjust external horizontal sensitivity between calibrated steps of HORIZONTAL DISPLAY, and is inoperative in detent (CAL) position.
16. HORIZONTAL POSITION. Adjust position of trace horizontally; vertical controls are on panel of plug-in unit.
17. SWEEP TIME. Selects sweep time duration in calibrated 1-2-5 steps from 0.1 μSEC/CM to 5 SEC/CM.
18. VERNIER. Adjusts sweep time between calibrated steps of SWEEP TIME switch and is in operative in detent (CAL) position.

Figure 3-1. Description of Front-Panel Controls and Connectors

SECTION III
OPERATION

3-1. GENERAL.

3-2. The front panel labeling of the Model 175A closely describes the function of each control. The instrument has a rise time of less than 7 nanoseconds, and compatible test probes are provided. Vertical controls are on the panel of the vertical plug-in unit. Their operation is described in the manual for that instrument.

3-3. BEAM FINDER.

3-4. BEAM FINDER locates the trace when it might otherwise be off the screen. Depressing this button brings the trace on the screen, defocused and intensified. The POSITION controls can then be adjusted to bring the trace to the center of the screen.

3-5. CALIBRATION.

3-6. The CALIBRATOR amplitude is accurate to 1% from 15°C to 35°C (50°F to 95°F). Square-wave outputs are provided at an amplitude of 1 and 10 volts and a frequency of approximately 1 kc.

3-7. TRIGGERING.

3-8. Four front-panel controls affect the start of the normal sweep. They are the TRIGGER SOURCE switch, TRIGGER LEVEL control, TRIGGER SLOPE switch, and SWEEP MODE control.

3-9. TRIGGER SOURCE.

3-10. The TRIGGER SOURCE switch selects the source of the sweep trigger: the power line (LINE), the signal applied to the vertical amplifier (INT), or an external signal applied to TRIG INPUT (EXT AC or EXT DC). With INT or EXT AC triggering selected, the trigger signal is ac-coupled to the sweep generator. With EXT DC selected, the trigger signal is dc-coupled to the sweep generator.

3-11. TRIGGER LEVEL.

3-12. The TRIGGER LEVEL control selects the voltage level on the trigger signal at which the sweep starts. The control provides continuous adjustment of the trigger level from about -5 volts to about +5 volts on external trigger signals and over a range equivalent to 6 centimeters of vertical deflection on internal trigger signals.

3-13. TRIGGER SLOPE.

3-14. TRIGGER SLOPE determines whether the sweep starts on the positive-slope or negative-slope portion of the trigger signal.

3-15. SWEEP MODE.

3-16. The SWEEP MODE control determines whether the sweep requires a trigger or free runs. The control is continuously adjustable with a switched position (PRESET) at its counterclockwise extreme. The PRESET triggering condition is best for nearly all triggered functions. At some discrete frequencies it may be desirable to move the control out of PRESET.

3-17. SWEEP CONTROLS.

3-18. SWEEP TIME.

3-19. There are 24 positions of the SWEEP TIME control, from 5 SEC/CM to 0.1 μSEC/CM, accurate to ±3%. Intermediate (uncalibrated) sweep times may be obtained by adjusting sweep time VERNIER.

3-20. SWEEP MAGNIFIER.

3-21. In the INT SWEEP X1 position of HORIZONTAL DISPLAY the basic sweep time is that indicated by the setting of the SWEEP TIME switch. In the X10 magnified position the displayed sweep is 10 times faster, accurate to ±5%. Divide the SWEEP TIME scale by 10 to obtain the actual sweep time. The magnified signal is actually 10 screen diameters across; however, HORIZONTAL POSITION has enough range to permit any portion of the presentation to be positioned on screen.

3-22. On the fastest sweep time, 0.1 μSEC/CM X10 (10 nsec/cm) do not use the first 5 cm of trace for time-scale measurements since small non-linearities may exist. Due to the delay in the vertical amplifier, this portion of the trace precedes the actual triggering point of the waveform. As long as the first 5 cm of trace is positioned off screen in the 10 μSEC/CM X10 position of SWEEP TIME, the full 10-cm display may be used.

3-23. HORIZONTAL FUNCTIONS.

3-24. HORIZONTAL DISPLAY performs three external horizontal input functions: it selects external input, sets the sensitivity to 0.1 v/cm or 1 v/cm, and arranges the input circuit for ac or dc coupling.

3-25. INTENSITY MODULATION.

3-26. INTENSITY MODULATION controls are on the rear panel of the Model 175A (see figure 3-5). A positive 20-volt pulse will blank the trace at normal intensities.

3-27. STEP-BY-STEP PROCEDURES.

3-28. Figure 3-1 briefly describes the function of each of the Model 175A controls. Step-by-step procedures for a few basic operations are given in figures 3-2 through 3-5. Included are instructions for compensating the probes. The numbers on each control refer to the corresponding step in the text below the illustration.

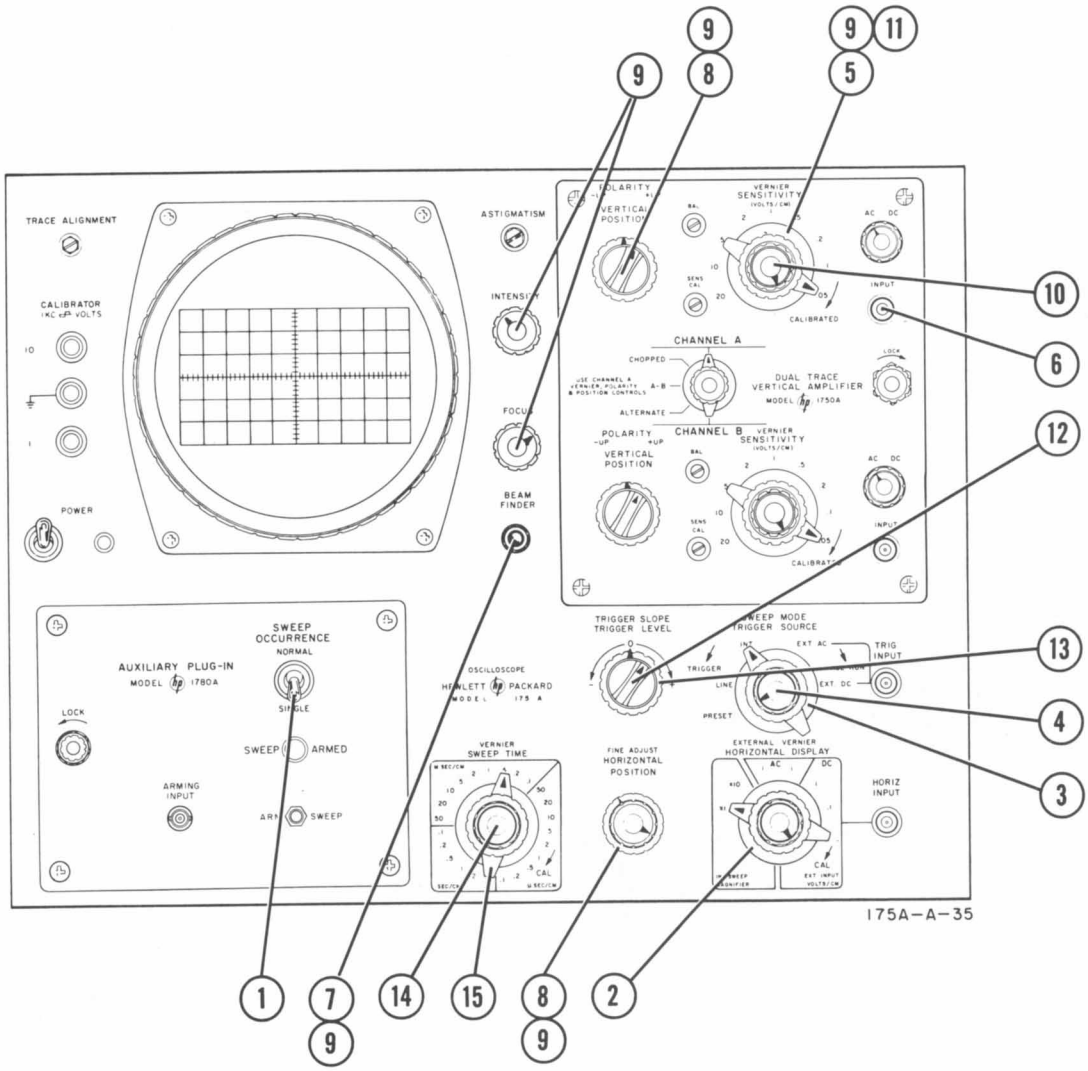

1. Set INTENSITY MODULATION (rear panel) to INT and SWEEP OCCURRENCE to NORMAL.
2. Set HORIZONTAL DISPLAY to INT SWEEP X1.
3. Set TRIGGER SOURCE to INT.
4. Set SWEEP MODE to PRESET.
5. If signal amplitude is unknown, set SENSITIVITY to 20 VOLTS/CM.
6. Connect signal to vertical INPUT.
7. If trace is not visible, depress BEAM FINDER.
8. Adjust HORIZONTAL, VERTICAL POSITION.
9. Release BEAM FINDER, adjust FOCUS and INTENSITY. Increase sensitivity, if necessary to trigger sweep, and readjust POSITION controls to center trace.
10. For vertical amplitude measurements, set sensitivity VERNIER to CALIBRATED.
11. Set SENSITIVITY for a vertical display between 2 and 6 centimeters high.
12. Set TRIGGER SLOPE to trigger on positive- or negative-going slope of signal, as desired.
13. Adjust TRIGGER LEVEL, if necessary, for stable triggering.
14. If time-scale measurements are to be made, set sweep time VERNIER to CAL.
15. Set SWEEP TIME for horizontal display as desired.

Figure 3-2. Internal Sweep

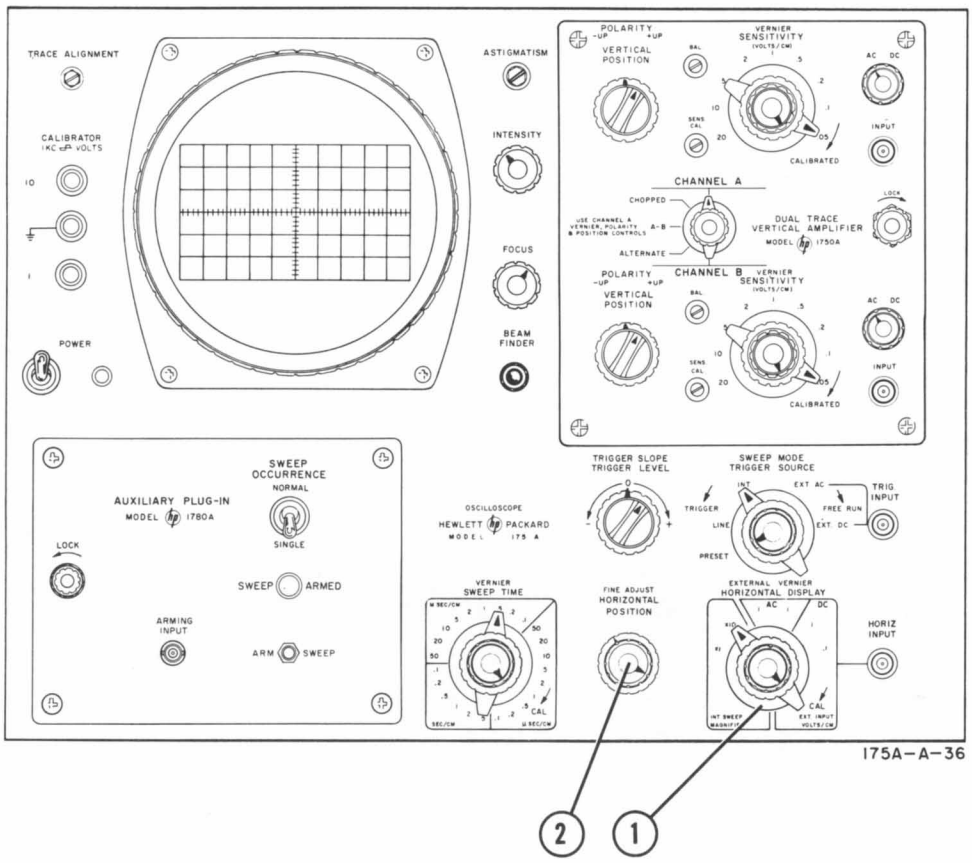

Set controls as in figure 3-2.

1. Set HORIZONTAL DISPLAY to INT SWEEP X10.

2. Adjust HORIZONTAL POSITION to view any part of the display. Do not make time measurements in the first 5 cm of fastest magnified sweep (0.1 μSEC/CM X10).

Figure 3-3. Magnified Sweep

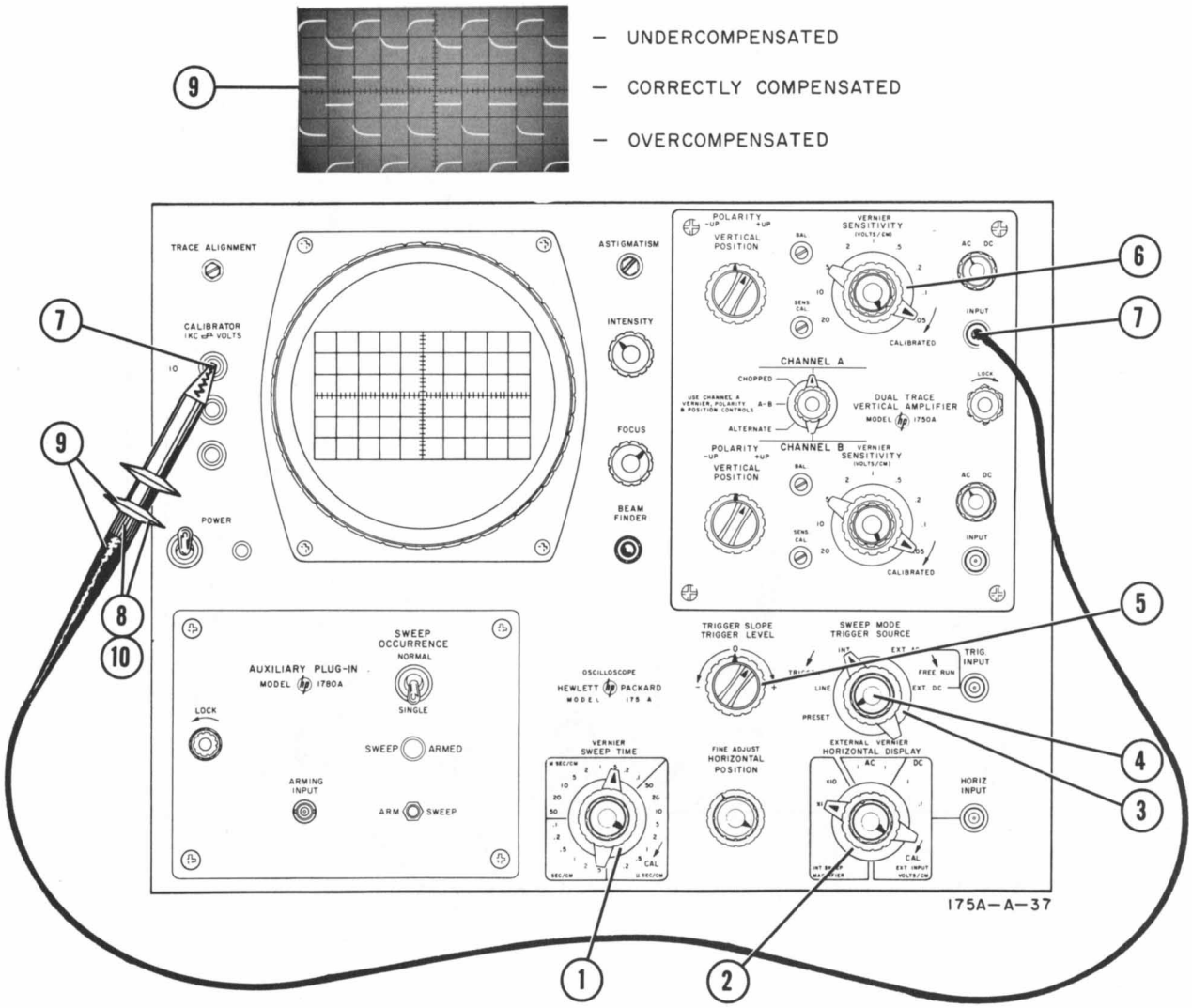

1. Set SWEEP TIME to 0.5 MSEC/MC.
2. Set HORIZONTAL DISPLAY to INT SWEEP X1.
3. Set TRIGGER SOURCE to INT.
4. Set SWEEP MODE to PRESET.
5. Set TRIGGER LEVEL to 0.
6. Set SENSITIVITY to 0.2 VOLTS/CM.
7. Connect probe to vertical INPUT and touch tip to 10 VOLTS CALIBRATOR.
8. Loosen knurled locknut behind rear flange of test probe.
9. Holding vinyl sheath behind locknut, rotate rear flange to obtain correctly compensated square wave illustrated above.
10. Tighten locknut without changing adjustment.

Figure 3-4. Probe Compensation

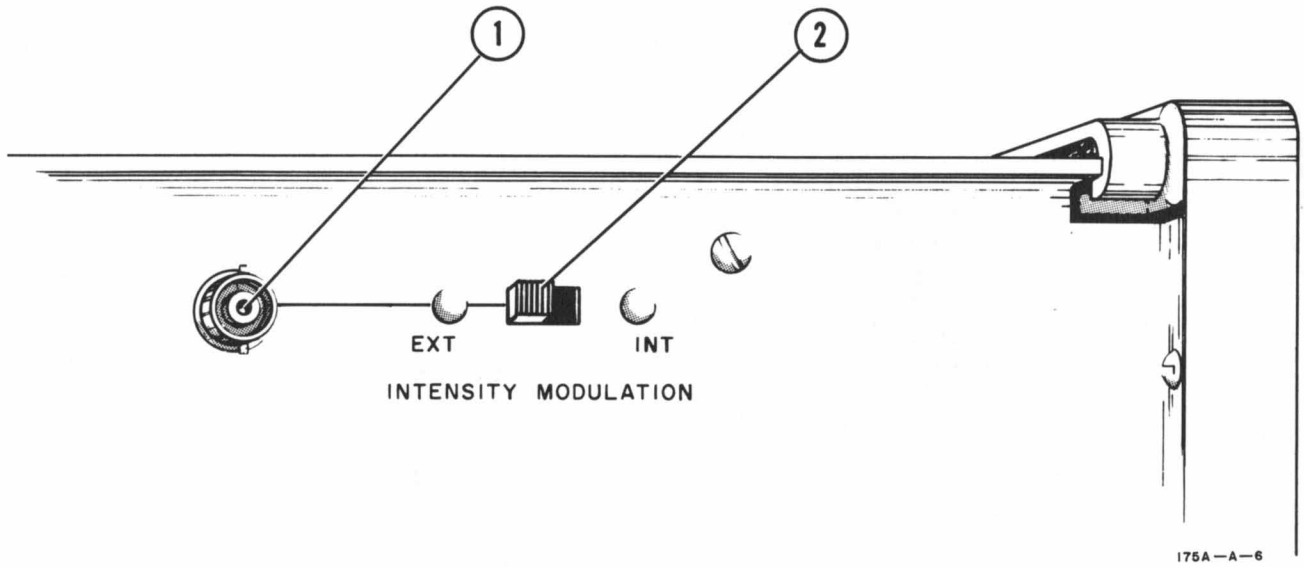

1. Connect modulating voltage to INPUT (+20 volts will blank trace at normal intensity).

2. Switch to EXTERNAL.

Figure 3-5. Intensity Modulation

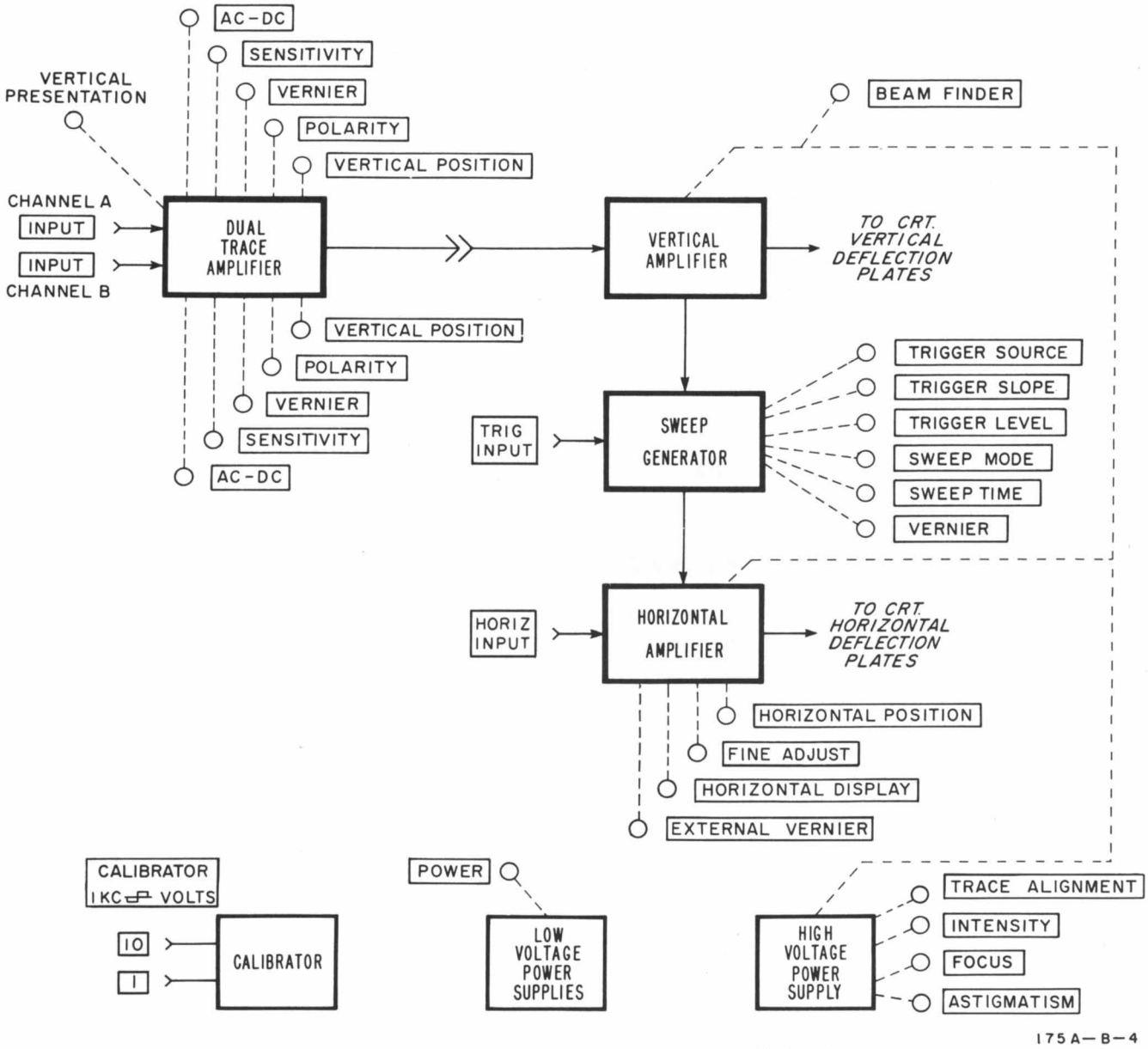

Figure 4-1. Overall Block Diagram of Model 175A with Model 1750A Plug-In Unit

SECTION IV
PRINCIPLES OF OPERATION

4-1. OVERALL FUNCTIONAL DESCRIPTION.

4-2. The Model 175A consists of a high- and a low-voltage supply, a vertical and a horizontal amplifier, a sweep generator and a calibrator. Both power supplies are regulated, as is the dc heater supply. Options include a gate- and sweep-output circuit not included in the standard instrument. Figure 4-1 shows a block diagram of the instrument illustrating the main functional units and controls. For clarity, a dual-trace plug-in amplifier has been shown as part of the diagram. The circuits of the plug-in units are described in the manuals for those instruments. Circuit diagrams of the Model 175A are shown in figures 5-19 to 5-37.

4-3. VERTICAL AMPLIFIER. The vertical amplifier delays the signal received from the dual-trace amplifier and applies the amplified signal to the vertical deflection plates of the crt. Before the signal is delayed, the vertical amplifier applies part of the signal to the sweep generator for internal triggering of the sweep.

4-4. SWEEP GENERATOR. The sweep generator accepts a trigger signal from an internal or external source and generates a fast-rising trigger which is synchronized with the trigger signal. The trigger starts the linearly rising sweep voltage which drives the beam horizontally across the crt screen. The sweep generator thus provides a linear time base on which to measure the vertical signal. The sweep generator also provides an unblanking pulse to turn on the crt beam during the sweep.

4-5. HORIZONTAL AMPLIFIER. The horizontal amplifier converts the internal sweep or external signal from unbalanced to balanced, and amplifies the signal to the level required to drive the horizontal deflection plates of the crt.

4-6. CALIBRATOR. The calibrator multivibrator generates a square wave of about 1 kc with 1-volt and 10-volt outputs.

4-7. HIGH-VOLTAGE POWER SUPPLY. The high-voltage power supply is an rf oscillator-rectifier circuit which generates the three regulated dc voltages required for operation of the crt.

4-8. LOW-VOLTAGE POWER SUPPLIES. Operating voltages for all the oscilloscope circuits, including the high-voltage supply, are provided by the low-voltage power supplies. All dc voltages are regulated.

4-9. VERTICAL AMPLIFIER.

4-10. The vertical amplifier is a conventional balanced differential amplifier. The block diagram is shown in figure 4-2. The amplifier receives the balanced signal from the plug-in vertical amplifier, amplifies the signal, and drives the vertical deflection plates of the crt. The circuit includes a delay line which delays the vertical signal 0.2 μsec before applying it to the vertical plates of the crt. Prior to the delay line, the signal from one side of the amplifier is sampled, amplified and applied to the sweep generator for internal triggering of the sweep. This starts the sweep in advance of arrival of the vertical signal at the crt deflection plates. The delayed signal is also applied to horizontal plug-in connector J105 for use in the Model 1782A Display Scanner.

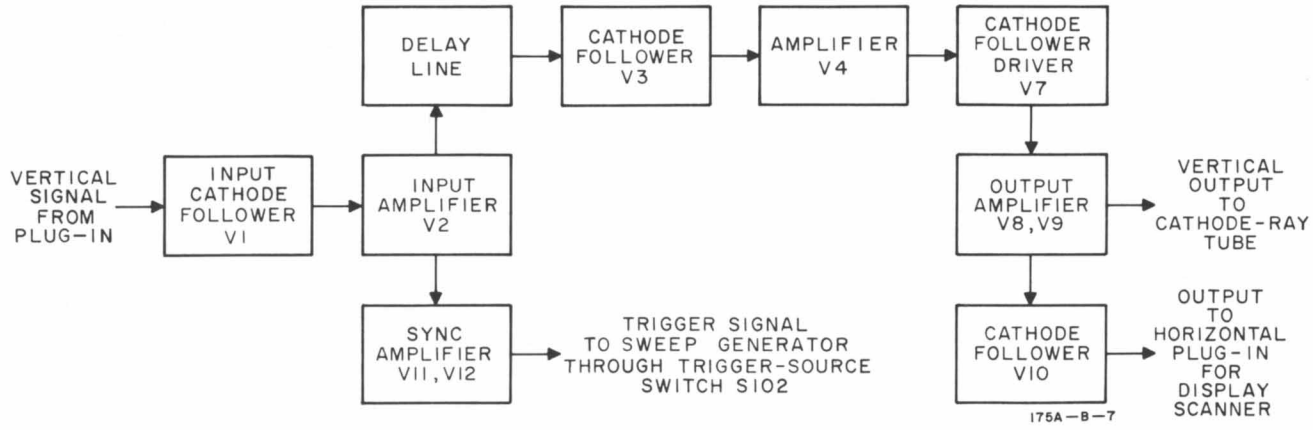

Figure 4-2. Vertical Amplifier Block Diagram

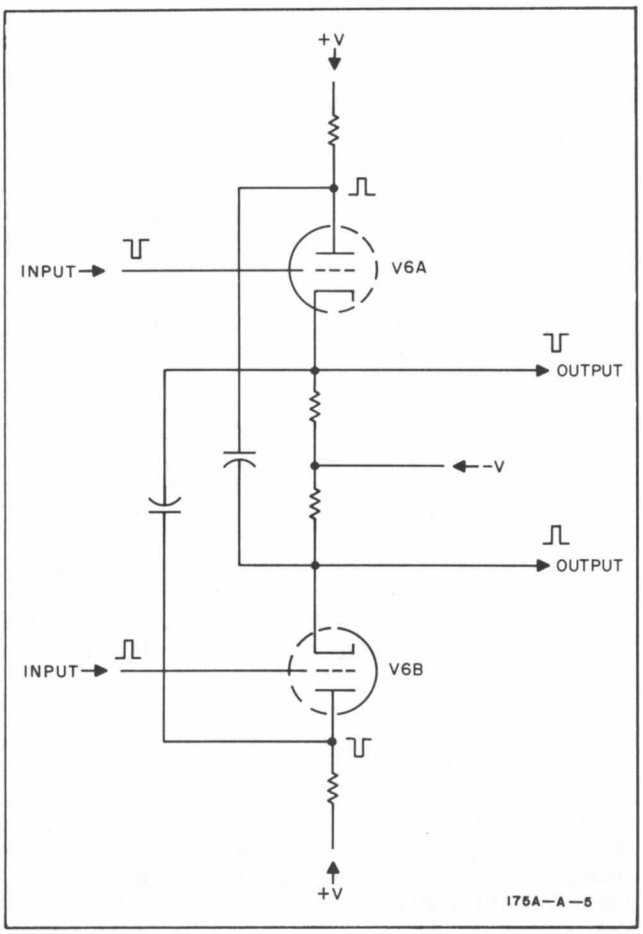

Figure 4-3. Cross-Coupled Cathode Follower Simplified Schematic Diagram

4-11. CROSS-COUPLED CATHODE FOLLOWER.

4-12. Input stage V1, as well as V3 and V7, are cross-coupled cathode followers. The simplified schematic is shown in figure 4-3. The cross-coupled cathode follower circuit provides a low impedance driving source for the following stage. At low frequencies, the stage acts as a simple cathode follower. High frequency signals appearing at the plate circuits readily pass through coupling capacitors to the opposite cathode. Since these high-frequency signals are in phase with the signals at the opposite cathode, they add to the current available to the load. The decrease in load impedance at high frequencies is partly compensated by the increase in high-frequency current offered by the cross-coupled cathode follower. The plate and cathode resistors are the same value, therefore voltages at the plates and cathodes are equal in amplitude and the signals are effectively added in parallel. Since the plate and cathode signals are added at high frequencies, the effective output impedance is reduced.

4-13. DIFFERENTIAL AMPLIFIER.

4-14. Input amplifier V2 as well as V4 and the combination of V8 and V9 are differential amplifiers. An unbalanced signal applied to one grid will appear at both plates balanced and amplified. Common-mode signals, such as hum, at the grids are reduced in magnitude at the plates. In the circuit of amplifier V4, cathode degeneration is introduced by Gain control R45, reducing the gain of the stage.

4-15. PEAKING.

4-16. Series and shunt peaking are provided throughout the amplifier to extend the bandwidth while maintaining optimum transient response. Coils L7 and L8 adjust high-frequency response. Capacitors C22 and C35, which remove cathode degeneration in the circuits of V4 and V8-V9 as signal frequency increases, provide a means of adjusting mid-frequency and low-frequency response.

4-17. SYNC AMPLIFIER.

4-18. The sync amplifier is composed of two cathode followers (input and output) and two amplifiers. The sync amplifier samples the signal prior to the vertical amplifier delay line and delivers this amplified signal to the trigger generator to start the sweep. Since the signal in the vertical amplifier is delayed 0.2 μsec after the sync amplifier pick-off point, the sweep is able to start before the vertical signal reaches the crt deflection plates.

4-19. DELAY LINE.

4-20. The delay line is constructed to provide a 0.2 μsec delay. The internal impedance of input amplifier V2 in parallel with plate load resistors R23 and R24 is designed to match the impedance of the delay line in order to minimize reflections. The delay line is peaked with L13 and L14 for optimum transient response.

4-21. CIRCUIT PROTECTION.

4-22. Diodes CR1, 2, 3, and 4 prevent the grid-cathode voltage of V3 and V7 from becoming excessive during turn-on time.

4-23. SCAN OUTPUT.

4-24. Cathode follower V10 provides low-impedance output to the horizontal plug-in connector for use with the Model 1782A Display Scanner. A balanced divider, R71-R73 and R74-R72, reduces the dc level at the grids of V10 to approximately zero volts; C36 and C37 compensate the divider at high frequencies. C33 balances the high-frequency scan output.

4-25. SWEEP GENERATOR.

4-26. The sweep generator consists of sweep-generating circuits plus an amplifier and trigger generator which actuate the sweep-generating circuits. A block diagram of the sweep generator is shown in figure 4-4.

4-27. TRIGGER GENERATOR.

4-28. The trigger signal is applied through differential driver V101 to trigger-generator tunnel diode CR102 and amplifier Q103. TRIGGER SLOPE and TRIGGER LEVEL controls are in the driver circuit.

4-29. The trigger generator is a tunnel diode acting as a bistable device to convert an input signal of any wave shape to a rectangular wave with very fast

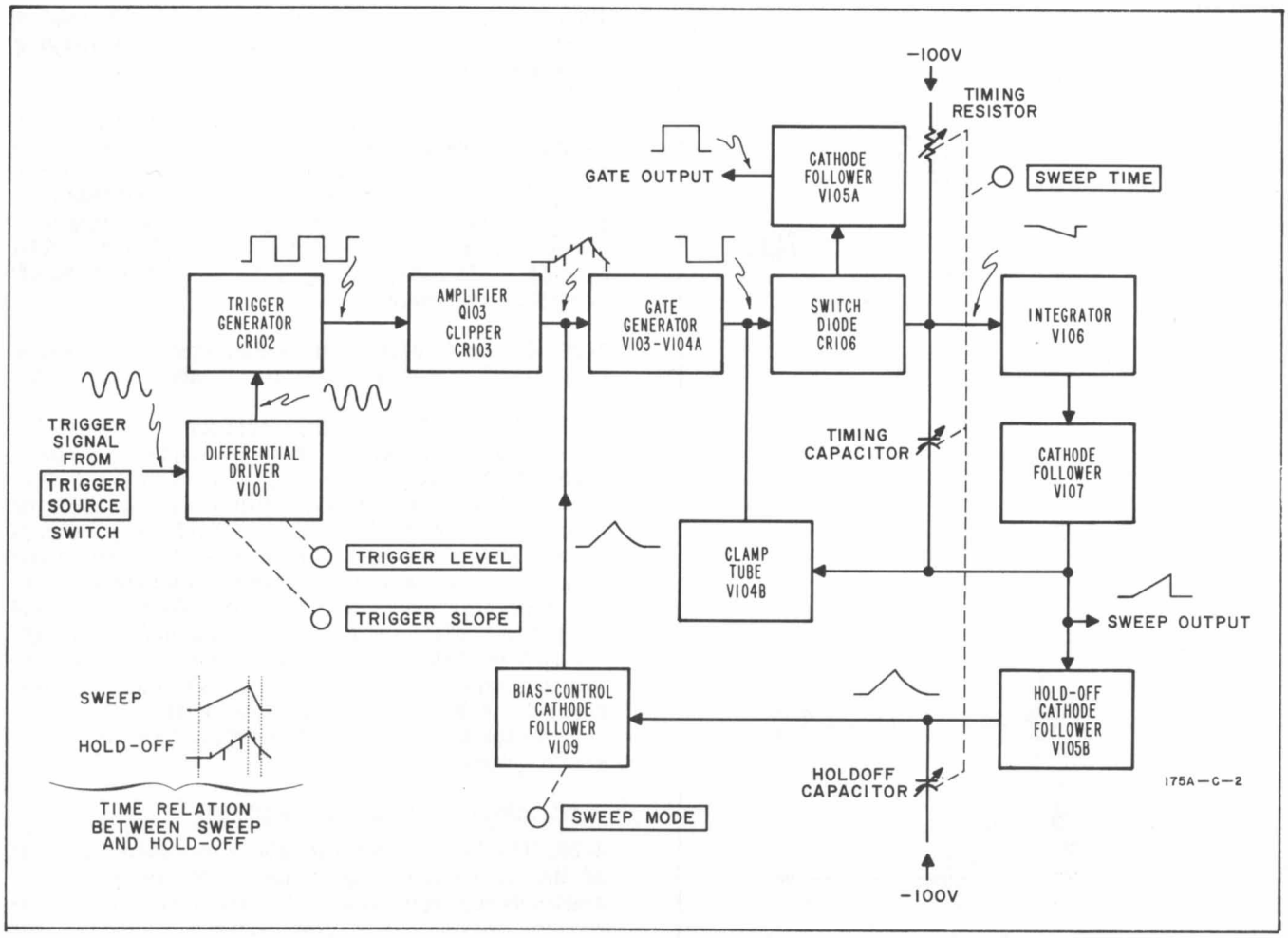

Figure 4-4. Sweep Generator Block Diagram

switching times. A simplified circuit is shown in figure 4-5A, and the composite characteristic of this circuit is illustrated in figure 4-5B. The composite characteristic is the sum of the currents through the tunnel diode and through the Sensitivity control. Because the tunnel diode is a non-linear device with a negative resistance region while the Sensitivity control is a linear device, Sensitivity can be adjusted to alter the shape of the curve in figure 4-5B, achieving narrow switching limits between points D and E. The Symmetry control adjusts the total current to the circuit, establishing bias line CF, halfway between switching points D and E. As the trigger signal varies through its cycle, current and voltage follow the path CDGFEBC, producing the rectangular trigger output. The inductor sharpens the rise and fall times of the square wave by preventing fast current changes through the Sensitivity control. Points A and H represent the signal limits when the trigger signal is larger than necessary. The output of the trigger generator is differentiated by transformer T103, and the resulting sharp pulses actuate the gate generator.

4-30. SWEEP GENERATING CIRCUITS.

4-31. Gate generator V103/V104A is a Schmitt circuit with wide hysteresis limits. Between sweeps, the A section of bias control cathode follower V109 holds the bias at the input of the gate generator close to the lower hysteresis limit. The trigger generator applies both positive and negative triggers. The positive triggers are reduced in amplitude by clipper diode CR103 and have no effect, but a negative pulse drives the input to the gate generator below the lower hysteresis limit and causes the gate generator to switch (see paragraph 4-40).

4-32. When gate generator V103/V104A switches, it provides positive and negative gates. The positive gate is applied to the high-voltage power supply through the horizontal plug-in to turn on the crt beam. The negative gate applies reverse bias to switch diode CR106. Prior to the gate, the switch diode is forward biased and holds the input to integrator V106 at about -4 volts. The negative gate opens the diode switch and frees the input to the integrator.

4-33. Once freed, the input to integrator V106 starts going negative since it is connected to -100 volts through the sweep-time resistor (figure 5-22). The integrator amplifies and inverts its input to produce a large, positive-going output which is applied back to the input through cathode follower V107 and the sweep capacitor (figure 5-22). As a result, the

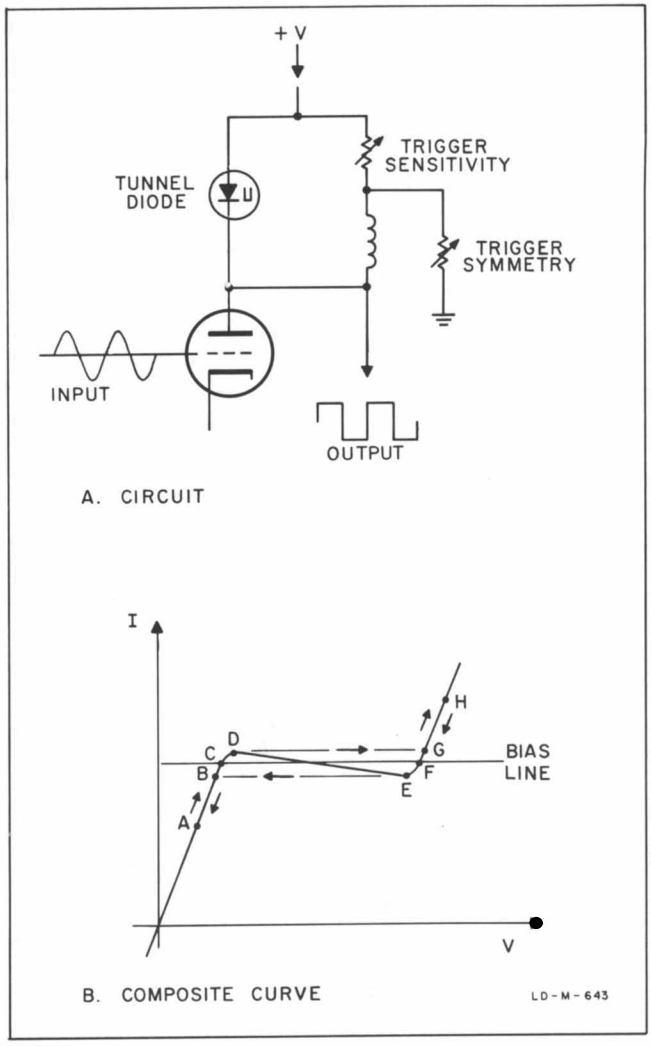

Figure 4-5. Trigger Generator Simplified Circuit and Composite Characteristic

change in voltage at the input to integrator V106 during the sweep time is only about one volt. Voltage across the sweep resistor, then, changes by about 1%, and the current through the resistor changes by the same amount. The current through the sweep resistor is the charging current for the sweep capacitor; therefore, the voltage across the sweep capacitor changes quite linearly with time, and the sweep signal is a nearly linear voltage ramp. The SWEEP TIME switch changes the value of sweep resistor or capacitor to change the sweep time. The sweep output is applied to the horizontal amplifier through the horizontal plug-in.

4-34. An attenuated sweep signal is applied to the input of gate generator V103/V104A through hold-off cathode follower V105B and section B of bias control cathode follower V109. This signal drives the input of the gate generator up to the upper hysteresis limit and causes the gate generator to switch back to its pre-sweep state. The gate generator then ends the the gates, blanking the crt and forward biasing switch diode CR106. The switch diode returns the input of integrator V106 to its pre-sweep level, discharging the sweep capacitor.

4-35. During a sweep time, hold-off cathode follower V105B charges a hold-off capacitor. After the sweep ends, this capacitor lets the input to gate generator V103/V104A down slowly enough to prevent that circuit from being triggered again until the remaining sweep circuits have recovered completely. The SWEEP TIME switch changes the size of the hold-off capacitor with sweep time.

4-36. Clamp V104B ensures that each sweep starts from the same voltage level, about -50 volts.

4-37. The SWEEP MODE control R172 (figure 5-22) determines the no-signal bias at the input to gate generator V103/V104A by setting the bias on the A section of bias control cathode follower V109. With the control set to PRESET or in the TRIGGER portion of its adjustable range, the gate generator bias cannot drop below its lower hysteresis limit unless the trigger generator provides a trigger. With the control set in the FREE RUN portion of its adjustable range, the gate bias is allowed to drop below its lower hysteresis limit. Thus as the hold-off capacitor discharges, it lets the gate generator bias all the way down to the lower hysteresis limit, and another sweep starts automatically.

4-38. SINGLE-SWEEP OPERATION.

4-39. The SWEEP OCCURRENCE switch (on the panel of the horizontal plug-in unit) selects normal or single-sweep operation. Normal operation is discussed above. For single-sweep operation, the SWEEP OCCURRENCE switch converts V109 into a Schmitt circuit. As the sweep signal from hold-off cathode follower V105B rises to end the gate from the gate generator, the sweep signal also switches the Schmitt circuit of V109 so that V109B conducts and V109A is cut off. The B section of V109 then holds the input to gate generator V103/V104A high enough so that triggers from the trigger generator cannot actuate the gate generator, and the sweep generating circuits are effectively disabled. A positive signal applied to V109A switches the Schmitt circuit of V109 so that V109A conducts and V109B is cut off. The A section of V109 then sets the input to the gate generator according to the setting of the SWEEP MODE control, and the sweep generating circuits are effectively armed. The switching signal for V109A can be an external signal applied to the ARMING INPUT connector or an internal signal obtained by switching SWEEP MODE control out of its PRESET position.

4-40. SCHMITT TRIGGER CIRCUIT.

4-41. The Schmitt trigger circuit is a form of bistable multivibrator used where fast-rising signals are required. Figure 4-6 shows a simplified Schmitt trigger circuit and input and output waveforms. If initially the input voltage is such that V1 is cut off, V2 conducts. As the input voltage becomes more positive, it will eventually reach a predetermined level (a) at which the circuit changes state; V1 conducts

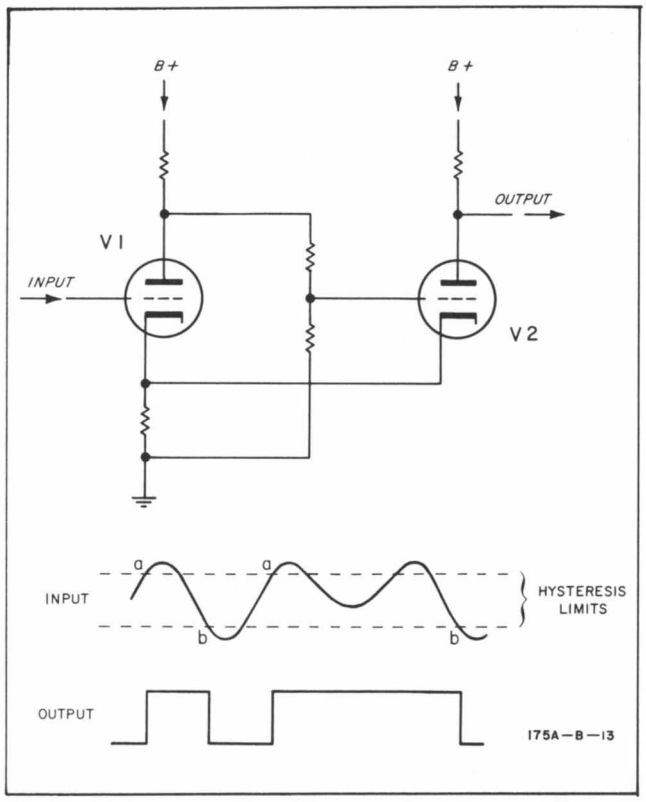

Figure 4-6. Simplified Schmitt Trigger Circuit

and V2 is cut off. If the input voltage then goes negative, the common cathode potential decreases and V2 grid goes positive. When the input reaches a second predetermined level (b), V2 conducts and the circuit switches back to its initial state. The output of the circuit is a voltage step, either positive or negative depending upon the slope of the input.

4-42. The input voltage levels at which a Schmitt trigger switches are the hysteresis limits. Note that the circuit does not switch unless the input crosses both limits.

4-43. HORIZONTAL AMPLIFIER.

4-44. The horizontal amplifier amplifies the internal sweep or an external signal applied to the horizontal INPUT connector and drives the horizontal deflection plates of the crt. Figure 4-7 is a simplified block diagram of the horizontal amplifier. The internal sweep signal is applied through the HORIZONTAL DISPLAY switch to cathode follower V203A. From V203A the signal passes through cathode follower V203B to one input of differential amplifier V204-V205. The other grid of the differential amplifier is returned to ground through a resistance. The differential amplifier amplifies the difference between its two input signals (one of which is ground) and provides a balanced output signal which is applied to output cathode followers V208A and V208B. These cathode followers drive the crt deflection plates. The cathode followers also drive capacitance driver V209 which acts as the cathode resistance for the output cathode followers. When high-speed signals such as the faster sweeps drive the crt beam from left to right, the capacitance driver discharges the capacitance of the crt deflection plates.

4-45. External horizontal signals applied to the INPUT connector pass through an attenuator, amplifier V201A-B, and the HORIZONTAL DISPLAY switch to cathode follower V203A. Otherwise the operation is the same as described above for the internal sweep signal.

4-46. The HORIZONTAL DISPLAY switch selects the signal to be applied to the horizontal deflection plates. The switch also controls the input attenuator and the sweep magnifier. The sweep magnifier attenuator between V203A and V203B provides a means of sweep expansion. The EXTERNAL VERNIER control varies the series resistance between V201A and V201B and thereby varies the output of V201B. The range of the EXTERNAL VERNIER is sufficient to provide continuous adjustment of external horizontal sensitivity between the calibrated settings of the HORIZONTAL DISPLAY switch. A section of the BEAM FINDER switch is in the common cathode circuit of V204 and

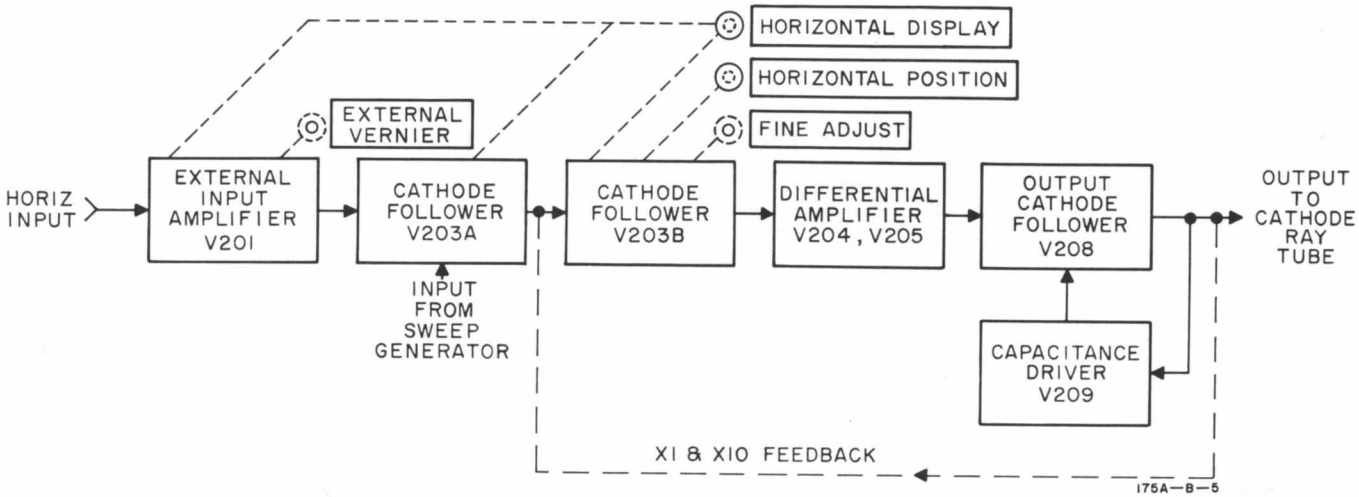

Figure 4-7. Horizontal Amplifier Block Diagram

V205. When pressed, the switch reduces the gain so that an unbalance prior to V204 and V205 cannot deflect the crt beam off the screen.

4-47. HIGH-VOLTAGE POWER SUPPLY.

4-48. The high-voltage supply provides the operating voltages for the crt. A block diagram of the high-voltage power supply is shown in figure 4-8. The 50-kc output of rf oscillator V301 is applied to high voltage transformer T301. The transformer steps up the oscillator output to high ac voltages which rectifiers V304, V305, and doubler stage V302 and V303 convert to dc. The dc voltages are then supplied to the crt.

4-49. Control of the high-voltage supply is accomplished by comparing the -2700 volts supplied to the crt cathode with +370 volts from the regulated low-voltage power supply. Changes in the -2700 volt supply produce an error voltage which is amplified by the dc control amplifier V306A-B and is applied to the oscillator as a control voltage. The control voltage changes the output amplitude of the oscillator, and hence corrects for the change in the -2700 volt supply.

4-50. The crt is normally biased off. The positive unblanking gate from the sweep generator, applied to the crt control grid, overrides the bias and unblanks the crt. The gating pulse time is identical to the sweep time so that the crt remains on during sweep time and external horizontal operation.

4-51. INTENSITY CONTROL.

4-52. INTENSITY control R319 varies the voltage applied to the control grid of the crt, and FOCUS control R334 varies the voltage applied to the focusing anode of the crt. The ASTIGMATISM control, R340 varies the voltage on the astigmatism lens (anode) of the crt to compensate for electron-beam defocusing when the beam is deflected. A section of the BEAM FINDER push button switch is in the crt control-grid supply circuit. When depressed, the switch returns the grid supply to +370 volts, thus decreasing grid bias voltage and turning on the crt.

4-53. TRACE ALIGNMENT CONTROL.

4-54. TRACE ALIGNMENT control R350 rotates the trace by varying the current through a coil around the neck of the crt, and hence the magnetic field through which the beam must pass. Rotation of the TRACE ALIGNMENT control changes the voltage and polarity across the deflection coil enough to give a control range of approximately ±10 degrees.

4-55. LOW-VOLTAGE POWER SUPPLIES.

4-56. The low-voltage power supplies include an independent supply and three dependent supplies. The -100 volt supply is the independent supply. It is a reference for the +370 and +110 volt supplies and provides operating voltage to the differential amplifier of the +110 volt supply and to the sensor amplifier of the +6.3 volt supply.

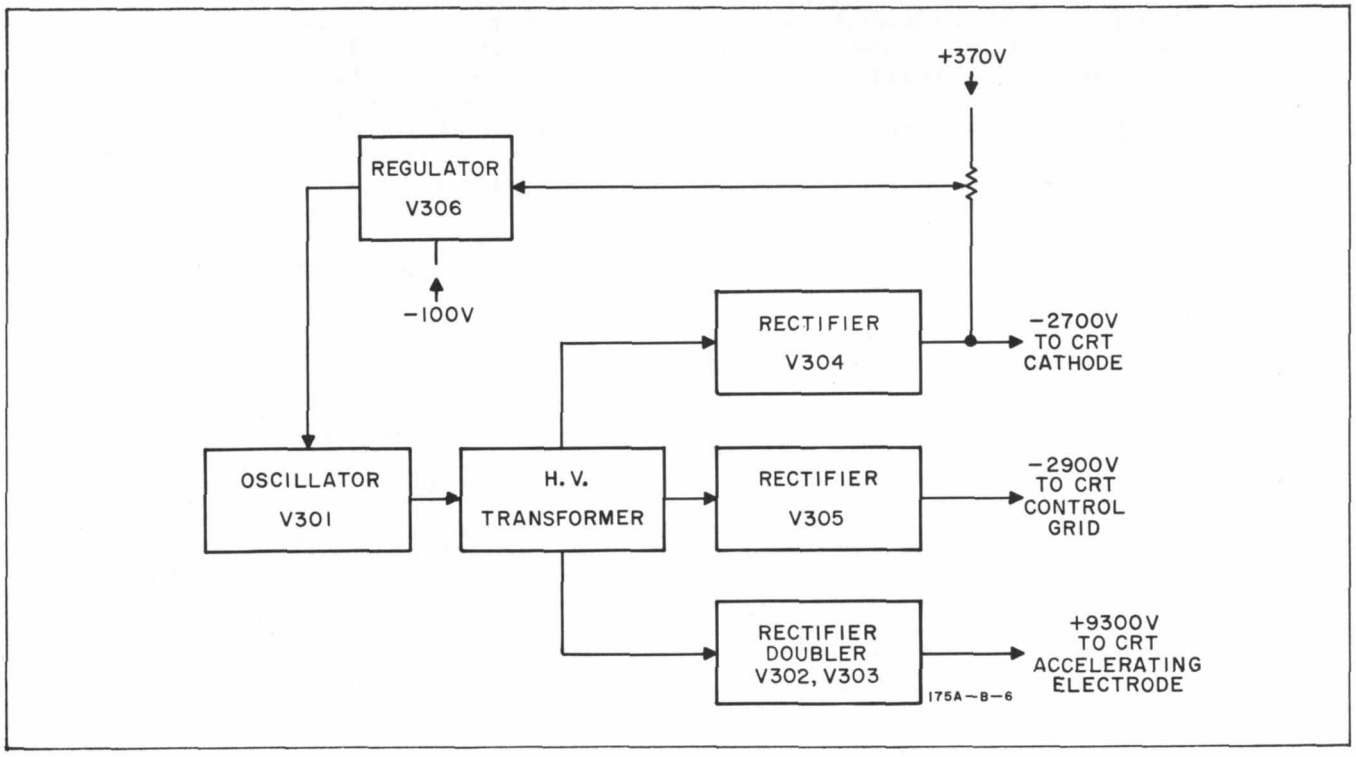

Figure 4-8. High-Voltage Power Supply Block Diagram

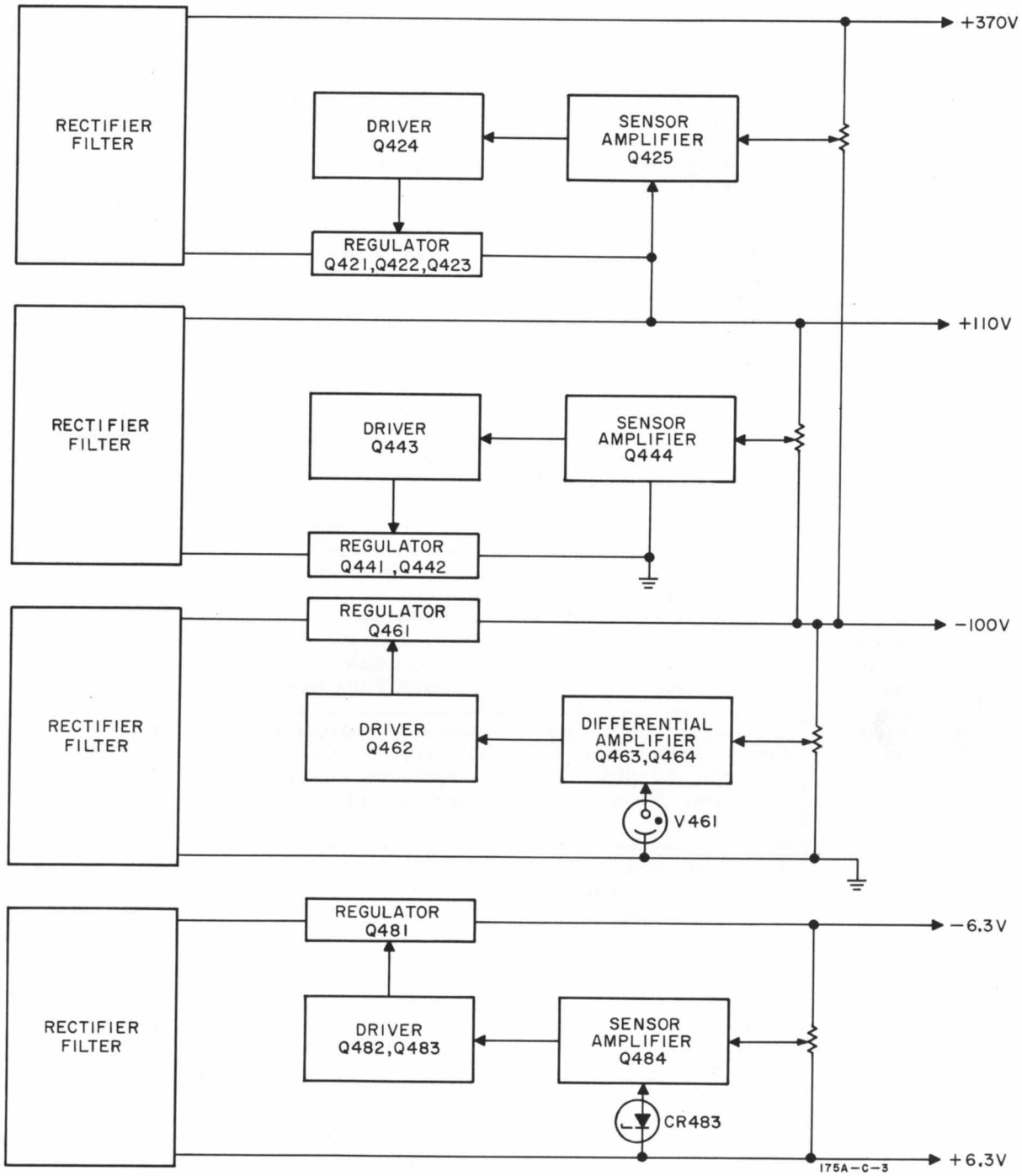

Figure 4-9. Low-Voltage Power-Supply Block Diagram

4-57. A simplified block diagram of the regulated power supplies is shown in figure 4-9. Each series regulator acts as a variable resistance in series with each supply output (even if the series regulator is in the return leg of the supply, as in the +110 volt and +370 volt returns, the regulator is in series with the output). A sensor or differential amplifier senses any change in the output voltage by comparing the output against a reference voltage. The amplifier then changes the effective resistance of the series regulator, and thereby the voltage drop across it, to oppose the change in output voltage.

Table 5-1. Test Equipment for Checks and Adjustments

Item	Instrument	Instrument Characteristics	Required to Test	Ref Para	Model
1	Signal Generator	50 kc, 500 kc, 1 mc, 50 mc, 1.5 volt output; output amplitude constant with frequency	Horizontal Bandwidth Trigger Sensitivity	5-13 5-17	Tektronix Type 190A
2	Oscillator	Frequency: 1 kc Amplitude: 10 volts	Trigger Point	5-16	hp 200CD
3	Calibration Generator	Output: 0.3 to 50 volts peak-to peak, 0.03 to 0.2 volts rms (±0.35%), 0 to 300 volts dc	Horizontal Sensitivity Calibrator High-Voltage Power Supply Sweep Gain Trigger Sensitivity and Symmetry Vertical Gain Calibrator	5-12 5-21 5-37 5-42 5-50 5-55 5-58	hp 738 AR
4	Time-Mark Generator	Marker intervals from 0.1 μsec to 5 sec in 1-2-5 steps; output amplitude greater than 50 mv	Sweep Calibration Sweep Magnifier Pattern Sweep Time	5-18 5-19 5-39 5-52	Tektronix Type 180A
5	Vertical Response Tester	Mercury-pulser vertical plug-in unit	Vertical Bandwidth Vertical Pulse Response	5-20 5-57	hp 10405A
6	Square-Wave Generator	Frequency: 4 kc to 1 mc Output (open circuit): 600 ohm: 50 volts 75 ohm: 7 volts	Intensity Modulation Horizontal-Amplifier Frequency Compensation Sweep Length Scan Response	5-22 5-46 5-51 5-56	hp 211A
7	Test Oscilloscope	10-mc passband, external sync, 0.1 μsec/cm to 5 sec/cm sweep time	Sweep and Gate Output Scan Response	5-23 5-56	hp 160B hp 170A hp 175A w/08*
8	DC Voltmeter	Range: 0 - 400 vdc, 1%	Low-Voltage Power Supplies Preset	5-33 5-49	hp 412A
9	High-Voltage Vacuum-Tube Voltmeter	Range: 0 - 3000 vdc, 8%	High-Voltage Power Supply	5-35	hp 410B hp 459A
10	AC Voltmeter	Range: 1 mv to 0.1 volt full scale Input Impedance: 1 megohm	Low-Voltage Power Supplies	5-33	hp 400D/H/L
11	Test Plug	To be constructed (see figure 5-1)	Scan Response	5-56	none
12	Vertical Test Adapter	Test plug to allow signals to be applied directly to vertical amplifier	Vertical Gain	5-55	hp 10404A
13	Variable Transformer	To vary line voltage from 102 to 128 (204 to 256) volts for power-supply measurement (para 5-33) To hold line voltage at 115 volts for waveform and voltage measurements during adjustment			

* Model 175A Oscilloscope with option 08, Sweep and Gate Output

SECTION V
MAINTENANCE

5-1. INTRODUCTION.

5-2. This section covers routine maintenance, troubleshooting, and adjustment of the Model 175A Oscilloscope. A performance check is included which may be used to verify proper operation of the instrument at incoming inspection or after adjustments have been made.

5-3. SERVICING THE AIR FILTER.

5-4. Inspect the air filter at the rear of the instrument and clean it before it becomes clogged enough to restrict the flow of cooling air. To clean, remove the filter from the instrument and wash it thoroughly in warm water and detergent. Dry thoroughly and coat with a filter adhesive such as Filter Coat No. 3 from Research Products Company, Inc. This adhesive is available from heating supply stores or from your Hewlett-Packard sales representative.

5-5. PERFORMANCE CHECK.

5-6. The performance check is intended to determine whether or not the instrument is operating within its specifications. Should adjustment be required, refer to paragraph 5-25. To check the vertical and horizontal plug-in units, refer to the individual manuals covering these instruments.

5-7. TEST EQUIPMENT.

5-8. Test equipment recommended for the performance check is listed in table 5-1, items 1 through 7. Similar instruments having the listed characteristics may be substituted.

5-9. PRELIMINARY SETTINGS.

5-10. Vertical and horizontal plug-in units must be in place to make the performance check. Set the 115-230 volt switch to the line voltage being used.

a. If the vertical plug-in unit has more than one channel, select CHANNEL A and use channel A controls. Make the following settings on the panel of the vertical plug-in unit:

AC-DC . . . . . AC
SENSITIVITY . . . . . 2 VOLTS/CM
VERNIER . . . . . CAL

b. Depending on model number, make the following settings on the panel of the horizontal plug-in unit:

Model 1780A:
SWEEP OCCURRENCE . . . . NORMAL
Model 1781A/B:
SWEEP SELECTOR . . . MAIN SWEEP
Model 1782A:
FUNCTION . . . . . OFF
Model 1783A:
TIME MARKER . . . . . OFF

c. Make the following settings on the Model 175A:

POWER . . . . . ON
INTENSITY MODULATION . . . . INTERNAL
SWEEP TIME . . . . . 1 MSEC/CM
Sweep VERNIER . . . . . CAL
HORIZONTAL DISPLAY X1
EXTERNAL VERNIER . . . . . CAL
TRIGGER SOURCE . . . . . INT
SWEEP MODE . . . . . FREE RUN
TRIGGER LEVEL 0
TRIGGER SLOPE . . . . . (+)

d. Depress BEAM FINDER to locate trace. With BEAM FINDER depressed, center display with horizontal and vertical position controls.

e. Release BEAM FINDER and turn INTENSITY control clockwise, if necessary. A trace should appear on screen.

f. The INTENSITY control should vary the intensity of the display from extinguished to brighter than normal intensity. Adjust INTENSITY for normal viewing level.

g. The FOCUS control at its extremes should defocus the display and focus the display at approximately mid-range. Adjust FOCUS for sharpest display. The ASTIGMATISM adjustment helps focus the display (see paragraph 5-38).

h. Adjust TRACE ALIGNMENT control to align the trace with horizontal lines of graticule.

5-11. HORIZONTAL AMPLIFIER.

5-12. SENSITIVITY.

a. Connect the Calibration Generator to HORIZ INPUT.

b. Set Calibration Generator output for 10 volts peak-to-peak.

c. Set:

HORIZONTAL DISPLAY . . 1 VOLT/CM AC
EXTERNAL VERNIER . fully counterclockwise

d. Horizontal deflection should be 1 cm or less.

e. Set:

EXTERNAL VERNIER . . . . . CAL

f. Horizontal deflection should be 10 cm ±0.5 cm.

g. Set Calibration Generator output for 1 volt peak-to-peak.

h. Set:

HORIZONTAL DISPLAY . 0.1 VOLT/CM AC

i. Horizontal deflection should be 10 cm ±0.5 cm.

j. Check the two dc positions of HORIZONTAL DISPLAY in the same manner.

k. Disconnect Calibration Generator.

5-13. BANDWIDTH.

a. Connect Signal Generator to HORIZ INPUT.

b. Set:

HORIZONTAL DISPLAY . . 0.1 VOLT/CM DC

c. Set Signal Generator for 50 kc and adjust output amplitude for a horizontal deflection of 10 cm.

d. Set frequency of Signal Generator to 500 kc.

e. Horizontal deflection should be at least 7 cm.

f. Disconnect Signal Generator.

5-14. SWEEP GENERATOR.

5-15. PRESET.

a. Set:

HORIZONTAL DISPLAY X1
SWEEP MODE . . . . . PRESET

b. No sweep should be present.

c. Connect CALIBRATOR 10 VOLT output to the vertical INPUT.

d. A stable synchronized display should be present.

e. Disconnect CALIBRATOR.

5-16. TRIGGER POINT.

a. Connect Oscillator to vertical INPUT.

b. Adjust Oscillator output for 5 cm deflection, and frequency to 1 kc.

c. Rotate TRIGGER LEVEL to both extremes. The starting point of the sweep should be adjustable to any point on the positive slope of the signal.

d. Set:

TRIGGER SLOPE . . . . . (-)

e. Rotate TRIGGER LEVEL to both extremes. The starting point of the sweep should be adjustable to any point on the negative slope of the signal.

f. Disconnect Oscillator. Return TRIGGER LEVEL to 0 and TRIGGER SLOPE to +.

5-17. TRIGGER SENSITIVITY.

a. Connect Signal Generator to the vertical INPUT and TRIG INPUT.

b. Set:

SWEEP TIME . . . . . 1 μSEC/CM
Vertical SENSITIVITY . . . 0.5 VOLT/CM

c. Set Signal Generator frequency to 1 mc and output amplitude for 1 cm of vertical deflection.

d. Adjust TRIGGER LEVEL, if necessary, for a synchronized display and reduce the Signal Generator output amplitude until the sweep stops. The sweep should continue to trigger at signal amplitudes 0.2 cm or greater.

e. Set:

TRIGGER SOURCE . . . . . EXT AC

f. Repeat steps c and d. The sweep should continue to trigger at signal amplitudes of approximately 0.5 cm or greater.

g. Set:

TRIGGER SOURCE . . . . . EXT DC

h. Repeat steps c and d. The sweep should continue to trigger at signal amplitudes of approximately 0.5 cm or greater.

i. Set frequency of Signal Generator to 50 mc and output amplitude for 3 cm of deflection.

j. Set:

SWEEP TIME . . . . . 0.1 μSEC/CM
HORIZONTAL DISPLAY X10

k. Repeat step d. The sweep should continue to trigger at signal amplitudes of approximately 1 cm or greater.

m. Set:

TRIGGER SOURCE . . . . . EXT AC

n. Repeat step d. The sweep should continue to trigger at signal amplitudes of approximately 1 cm or greater.

p. Set:

TRIGGER SOURCE . . . . . INT

q. Set Signal Generator output amplitude for 3 cm of deflection.

r. Repeat step d. The sweep should continue to trigger at signal amplitudes of approximately 2 cm or greater.

s. Disconnect Signal Generator.

t. Connect a Model 10003A (AC-21M) Probe to vertical INPUT.

u. Set:

TRIGGER SOURCE . . . . . LINE
Vertical SENSITIVITY . . . . 5 VOLTS/CM
SWEEP TIME . . . . . 5 MSEC/CM
HORIZONTAL DISPLAY X1
TRIGGER LEVEL 0

v. Connect probe tip to power line. Do not connect probe ground lead.

Table 5-2. Sweep Calibration

SWEEP TIME	Markers	Interval	SWEEP TIME	Markers	Interval
.1 μSEC/CM	10 mc	1 cycle/cm	1 MSEC/CM	1 msec	1 marker/cm
.2 μSEC/CM	5 mc	1 cycle/cm	2 MSEC/CM	1 msec	2 markers/cm
.5 μSEC/CM	1 μsec	1 marker/2-cm	5 MSEC/CM	5 msec	1 marker/cm
1 μSEC/CM	1 μsec	1 marker/cm	10 MSEC/CM	10 msec	1 marker/cm
2 μSEC/CM	1 μsec	2 markers/cm	20 MSEC/CM	10 msec	2 markers/cm
5 μSEC/CM	5 μsec	1 marker/cm	50 MSEC/CM	50 msec	1 marker/cm
10 μSEC/CM	10 μsec	1 marker/cm	.1 SEC/CM	100 msec	1 marker/cm
20 μSEC/CM	10 μsec	2 markers/cm	.2 SEC/CM	100 msec	2 markers/cm
50 μSEC/CM	50 μsec	1 marker/cm	.5 SEC/CM	500 msec	1 marker/cm
.1 MSEC/CM	100 μsec	1 marker/cm	1 SEC/CM	1 sec	1 marker/cm
.2 MSEC/CM	100 μsec	2 markers/cm	2 SEC/CM	1 sec	2 markers/cm
.5 MSEC/CM	500 μsec	1 marker/cm	5 SEC/CM	5 sec	1 marker/cm

w. A stable synchronized pattern should be obtained.

x. Disconnect probe from power line and vertical INPUT.

5-18. SWEEP CALIBRATION.

a. Set:

TRIGGER SOURCE . . . . . INT
SWEEP TIME . . . . . 5 SEC/CM
Sweep VERNIER . . . fully counterclockwise
SWEEP MODE . . . . . FREE RUN

b. It should take at least 125 seconds for the spot to travel 10 cm.

c. Set:

SWEEP MODE . . . . . PRESET
Sweep VERNIER . . . . . CAL

d. Connect the Time-Mark Generator to vertical INPUT. Set Time-Mark Generator output and SWEEP TIME as shown in table 5-2.

e. Adjust TRIGGER LEVEL and vertical SENSITIVITY, if necessary, for a stable, usable display.

f. In each case adjust HORIZONTAL POSITION to make the first marker coincide with the left graticule edge. The 10-cm marker should be within ±0.3 cm of the right graticule edge.

5-19. SWEEP MAGNIFIER.

a. Set:

SWEEP TIME . . . . . 0.1 MSEC/CM
HORIZONTAL DISPLAY X10

b. Set Time-Mark Generator output for 100 μsec markers.

c. With HORIZONTAL POSITION, set one marker to coincide with left graticule edge.

d. The next marker should be within ±0.5 cm of right graticule edge.

e. Set:

SWEEP TIME . . . . . 0.1 μSEC/CM

f. Set Time-Mark Generator output for 10 mc.

g. Set one cycle of the sine wave to cross the left graticule edge.

h. Except for the first cycle of the expanded display, the corresponding point on the waveform one cycle later should cross within ±0.5 cm of the right graticule edge.

i. Disconnect Time-Mark Generator.

5-20. VERTICAL AMPLIFIER BANDWIDTH.

a. Install Model 10405A Vertical Response Tester in place of vertical plug-in unit.

b. Set:

SWEEP TIME . . . . . 0.1 μSEC/CM

c. Adjust HORIZONTAL POSITION and TRIGGER LEVEL, if necessary, for a stable display.

d. Set Test Plug-In for a positive 5-cm pulse.

e. Center trace with VERTICAL POSITION. The 10% and 90% points on the pulse rise time are now 2 cm below and 2 cm above the main horizontal axis of the crt.

f. Set HORIZONTAL POSITION to place the 10% point on any vertical line of the graticule. The 90% point should be no more than 7 mm to the right of the 10% point.

g. Remove Test Plug-In and replace vertical plug-in unit.

5-21. CALIBRATOR.

a. Connect the Calibration Generator to vertical INPUT and set output for 10 volts peak-to-peak.

b. Set:

SWEEP TIME . . . . . 2 MSEC/CM
HORIZONTAL DISPLAY X1
Vertical SENSITIVITY . . . . . 1 VOLT/CM
Vertical Sensitivity
VERNIER . . . . . counterclockwise

c. Rotate vertical sensitivity VERNIER clockwise for exactly 5 cm of vertical deflection.

d. Disconnect Calibration Generator and connect CALIBRATOR 10 VOLT output to vertical INPUT. Vertical deflection should be 5 cm ±0.05 cm if ambient temperature is between 15°C and 35°C (50°F and 95°F). Vertical deflection should be 5 cm ±0.15 cm if ambient temperature is between 0°C and 15°C or 35°C and 55°C (32°F and 50°F or 95°F and 130°F).

5-22. INTENSITY MODULATION.

a. Connect the 600-ohm output of the Square Wave Generator to vertical INPUT and INTENSITY MODULATION INPUT.

b. Set 600-ohm output to maximum and frequency to 10 kc.

c. Set:

SWEEP TIME . . . . . 20 μSEC/CM
Vertical SENSITIVITY . . . . 10 VOLTS/CM
INTENSITY MODULATION . . . . . EXT
Vertical POLARITY . . . . . +UP

d. The top of the square wave should be intensified with respect to the bottom.

e. Disconnect Square Wave Generator. Return INTENSITY MODULATION to INT.

5-23. SWEEP AND GATE OUTPUT (OPTIONAL FEATURE).

a. Set SWEEP MODE to FREE RUN.

b. Trigger Test Oscilloscope with gate output signal from Model 175A.

c. Observe SWEEP OUTPUT signal on Test Oscilloscope. Signal should be a linear ramp of approximately -2.5 to +2.5 volts on all SWEEP TIME settings.

d. Observe GATE OUTPUT signal on Test Oscilloscope. Signal should be approximately 4 volts for the duration of sweep on all SWEEP TIME settings.

e. Disconnect Test Oscilloscope.

5-24. ACCESSORY PROBES.

a. Set:

SWEEP TIME . . . . . 0.5 MSEC/CM
Vertical SENSITIVITY . . . 0.2 VOLTS/CM

b. Connect the Model 10003A (AC-21M) Probe from vertical INPUT to CALIBRATOR 10 VOLT output.

c. Loosen locknut at rear of probe and rotate rear plastic flange with respect to cable. The waveform should change from one with overshoot to one with undershoot.

d. Adjust probe for best square wave and tighten locknut. Note vertical amplitude of display.

e. Disconnect probe from vertical INPUT and CALIBRATOR.

f. Connect CALIBRATOR 1 VOLT output directly to vertical INPUT. The vertical amplitude of the display should be equal to that noted in step d.

g. Disconnect CALIBRATOR from vertical INPUT.

5-25. ADJUSTMENTS.

5-26. This section covers internal adjustments of the Model 175A. If difficulty is encountered in making any adjustment, refer to paragraph 5-67 for troubleshooting procedures. A condensed adjustment procedure is given in table 5-9.

5-27. EQUIPMENT NEEDED FOR ADJUSTMENTS.

5-28. In table 5-1, items 3 through 13 are the test instruments recommended to make the adjustments outlined in this section. Equipment with equivalent characteristics may be substituted. The special horizontal Test Plug shown in figure 5-1 is required to test the main vertical amplifier scanner outputs.

5-29. LOCATION OF ADJUSTMENTS.

5-30. Figures 5-2 and 5-3 show the location of tubes and adjustments in the Model 175A. These diagrams are screened on the inside of the top and bottom covers of the instrument.

5-31. PRELIMINARY SETTINGS.

5-32. Install vertical and horizontal plug-in units in their compartments in the Model 175A. If the vertical plug-in unit has more than one channel, select CHANNEL A and use channel A controls.

a. Make the following settings on the panel of the vertical plug-in unit.

AC-DC . . . . . AC
VERNIER . . . . . CAL

b. Depending on model number, make the following settings on the panel of horizontal plug-in unit:

Model 1780A:
SWEEP OCCURRENCE . . . . NORMAL
Model 1781A/B:
SWEEP SELECTOR . . . MAIN SWEEP
Model 1782A:
FUNCTION . . . . . OFF
Model 1783A:
TIME MARKER . . . . . OFF

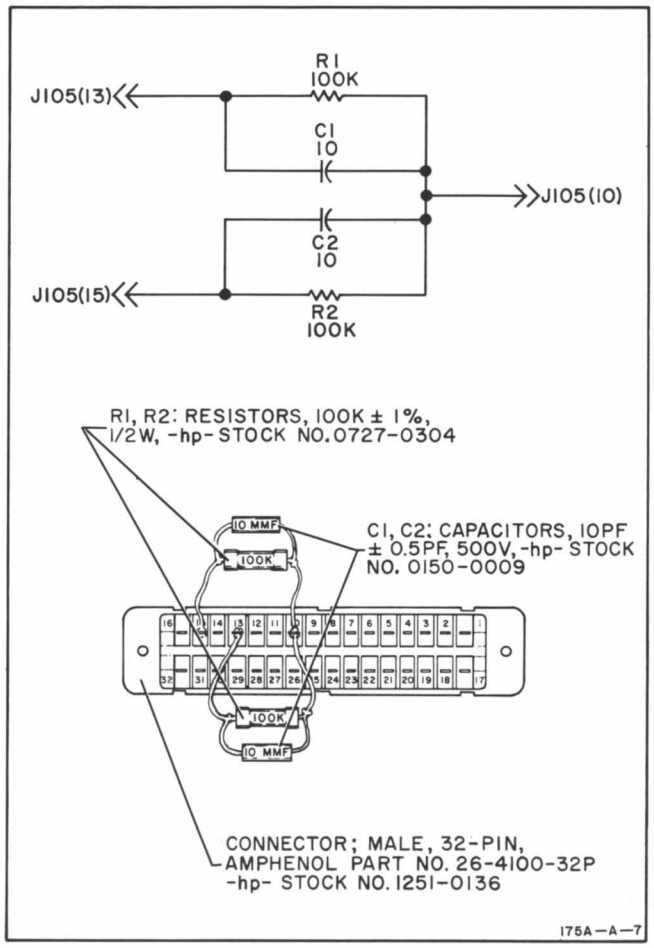

Figure 5-1. Test Plug

c. Connect Model 175A to power source through Variable Transformer and set line voltage to 115 (230) volts. Make the following settings on the panel of the Model 175A:

POWER . . . . . ON
HORIZONTAL DISPLAY . . 1 VOLT/CM AC
EXTERNAL VERNIER . . . . . CAL
TRIGGER SOURCE . . . . . INT
TRIGGER SLOPE . . . . . (+)
TRIGGER LEVEL 0
SWEEP MODE . . . . . PRESET
SWEEP TIME . . . . . 1 MSEC/CM
Sweep VERNIER . . . . . CAL

5-33. LOW-VOLTAGE POWER SUPPLIES.

5-34. Refer to figure 5-3 for location of adjustments.

a. Set line voltage to 115 volts (230 volts if the 115-230 volt switch is in 230-volt position).

b. Measure output of each supply connecting the DC Voltmeter to the terminals on the printed circuit board mounted adjacent and at right angles to the supply fuses (see figure 5-3).

c. The voltages will normally be within the limits given in table 5-3. If adjustment is required, make the adjustments in the order given in table 5-3.

Note

When the Model 1781A/B Sweep Delay Generator is installed in the Model 175A, all power supply voltages should be adjusted to within ±0.4 volts of normal.

d. Check regulation of each supply as the line voltage is varied between 102 and 128 volts. All regulated voltages should remain within 1% of the values noted in step b or c.

e. Measure ac ripple on each supply using the AC Voltmeter. The ripple should be within the values given in table 5-3.

Table 5-3. Power Supply Tolerances

Supply (volts)	Tolerance (volts)	Ripple (rms)	Wire Color Code	Adjustment
-100	±3	3 mv	violet	R472
+110	±3	3 mv	pink	R451
+370	±10	4 mv	red	R433
+6.3	±.2	2 mv	brown	R486
-6.3	±.2	2 mv	gray	R486

5-35. HIGH-VOLTAGE POWER SUPPLY.

5-36. Refer to figure 5-2 for location of adjustments.

5-37. DC OUTPUT.

a. Set line voltage to 115 volts.

b. Calibrate the High-Voltage Vacuum-Tube Voltmeter by setting the Calibration Generator to 300 volts, connecting the voltmeter 100:1 high-voltage divider probe to the generator output, and setting the Voltmeter to read 3 volts.

c. Set Voltmeter range to 30 volts and measure the voltage at pin 1 of the low-voltage power transformer (see figure 5-3).

d. The measured voltage should be -2700 volts ±100 volts.

e. Adjust HV Adj R328, if necessary, for a reading of -2700 volts.

f. Vary line voltage from 102 to 128 volts. The -2700 volt supply output should remain within ±25 volts of the reading obtained in step d or e.

5-38. ASTIGMATISM.

a. Center a low intensity spot on the crt.

b. Adjust FOCUS and ASTIGMATISM controls on front panel to obtain the smallest round and sharply focused spot.

5-39. PATTERN.

a. Connect the Time-Mark Generator to vertical INPUT.

b. Set:
HORIZONTAL DISPLAY X1

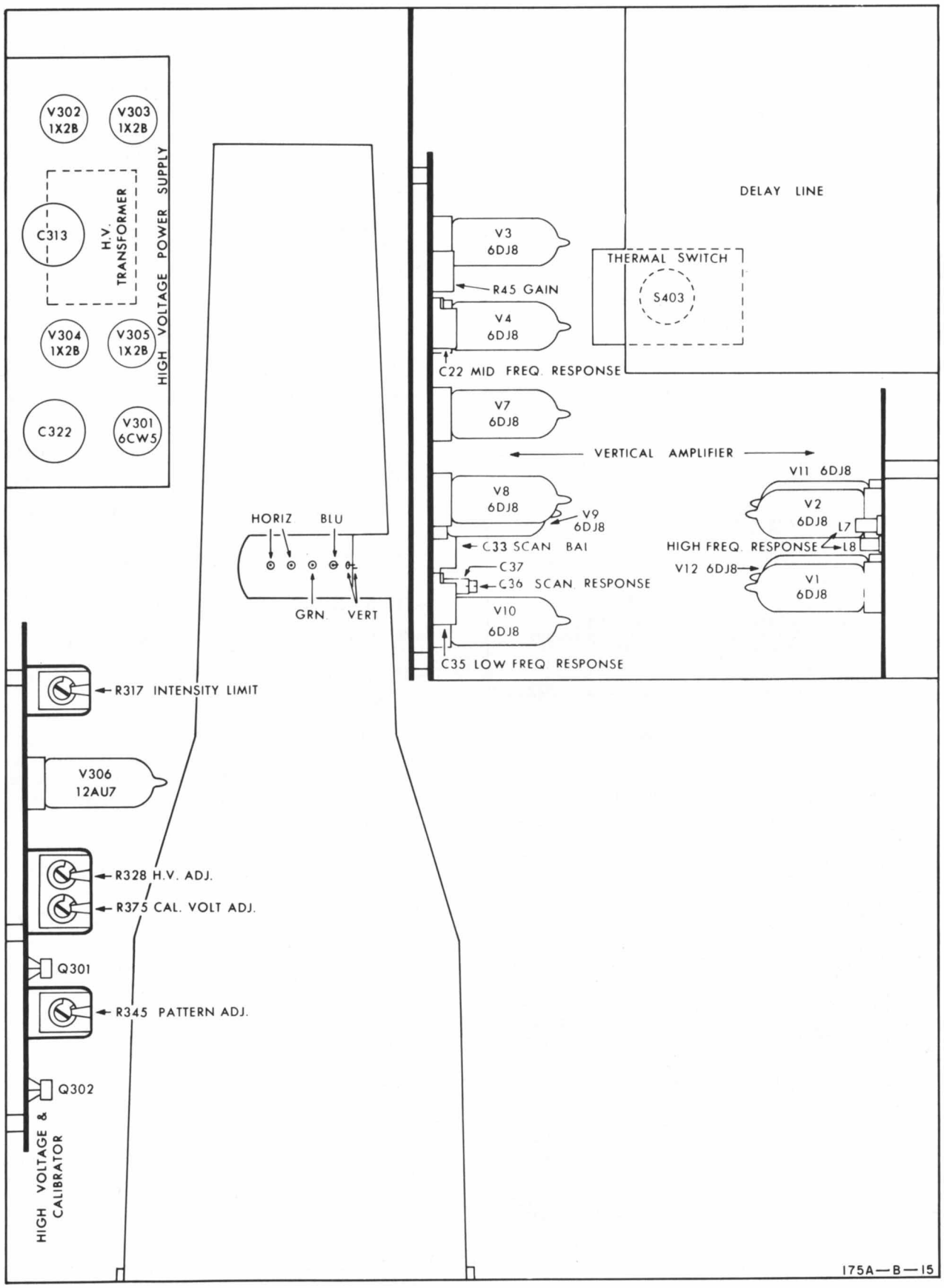

Figure 5-2. Adjustments and Component Locations, Top View

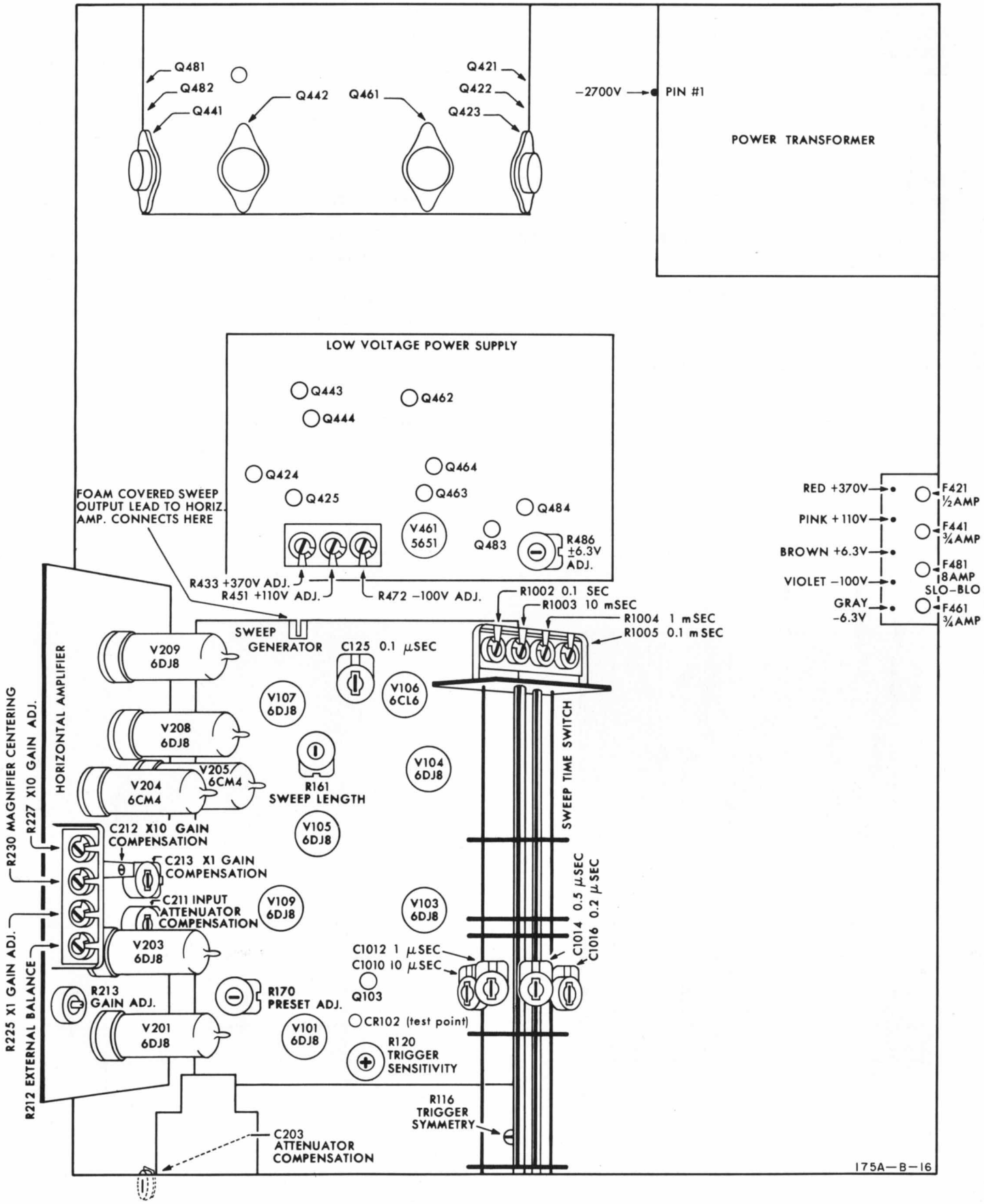

Figure 5-3. Adjustment and Component Locations, Bottom View

c. Set Time-Mark Generator output to 5 mc and adjust vertical SENSITIVITY and VERTICAL POSITION for a 6-cm display coinciding with top and bottom lines of graticule.

d. Set HORIZONTAL POSITION to align left side of display with left graticule edge.

e. Adjust Pattern Adj R345 for minimum barreling or pin-cushioning around top, bottom, and left sides of display (see figure 5-4).

f. Adjust HORIZONTAL POSITION to align right side of display with right graticule edge.

g. Trim Pattern Adj R345, if necessary, for minimum barreling or pin-cushioning. Repeat steps d and e for squarest overall pattern.

h. Disconnect Time-Mark Generator.

5-40. HORIZONTAL AMPLIFIER.

5-41. Refer to figure 5-3 for location of adjustments.

5-42. SWEEP GAIN.

a. Locate foam-covered wire which connects sweep generator output to horizontal amplifier input (see figure 5-3).

b. Disconnect wire from sweep generator printed circuit board.

c. Set:

HORIZONTAL DISPLAY X1

d. Connect the Calibration Generator to the foam-covered wire and set output to 50 volts peak-to-peak.

e. Center display and adjust X1 Gain Adj R225 for 5.5 cm of horizontal deflection.

f. Set:

HORIZONTAL DISPLAY X10

g. Set Calibration Generator output to 5 volts peak-to-peak.

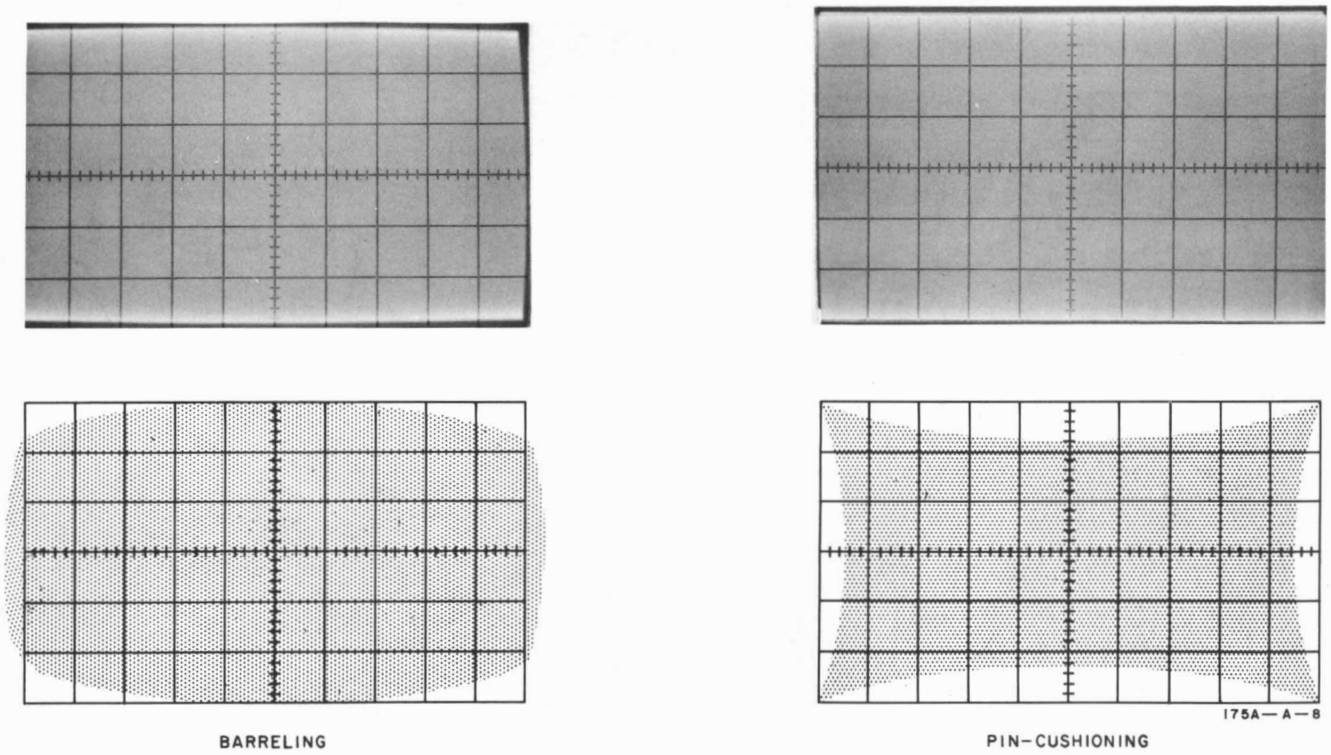

Figure 5-4. Pattern Adjustment

h. Center display and adjust X10 Gain Adj R227 for 5.5 cm of horizontal deflection.

i. Disconnect Calibration Generator from foam-covered wire.

5-43. INTERNAL BALANCE.

a. Set:

HORIZONTAL DISPLAY X10
SWEEP MODE . . . . just out of PRESET

b. Center the spot on crt with HORIZONTAL POSITION control.

c. Set:

HORIZONTAL DISPLAY X1

d. Adjust Magnifier Centering R230 to center spot.

e. Repeat steps a through d until spot does not move when switching HORIZONTAL DISPLAY from X1 to X10.

5-44. EXTERNAL BALANCE.

a. Set:

HORIZONTAL DISPLAY 0.1 VOLT/CM DC
EXTERNAL VERNIER fully counterclockwise

b. Center the spot on crt with HORIZONTAL POSITION control.

c. Set:

EXTERNAL VERNIER . . . . . CAL

d. Adjust External Balance R212 to center spot.

e. Repeat steps a through d until spot does not move when EXTERNAL VERNIER is rotated.

5-45. EXTERNAL GAIN.

a. Connect Calibration Generator to HORIZ INPUT.

b. Set:

HORIZONTAL DISPLAY . 0.1 VOLT/CM DC

c. Set Calibration Generator output to 1 volt peak-to-peak.

d. Adjust Gain Adj R213 for 10 cm of horizontal deflection.

e. Disconnect Calibration Generator.

5-46. FREQUENCY COMPENSATION.

a. Connect Square Wave Generator 600-ohm output to foam-covered wire disconnected in paragraph 5-42.

b. Connect 75-ohm output to TRIG INPUT.

c. Connect, with a jumper, the vertical INPUT to the point (sweep output) on sweep-generator printed-circuit board from which the foam-covered wire was disconnected.

d. Set:

Vertical SENSITIVITY . . . . 10 VOLTS/CM
Vertical Sensitivity VERNIER . . . . . CAL
Vertical AC-DC . . . . . AC
HORIZONTAL DISPLAY X1
TRIGGER SOURCE . . . . . EXT AC
SWEEP MODE . . . . . PRESET
SWEEP TIME . . . . . 0.1 MSEC/CM

e. Set 600-ohm and 75-ohm Square-Wave Generator outputs to maximum and frequency to 4 kc.

f. Center display and adjust TRIGGER LEVEL, if necessary, for a stable display (see figure 5-5).

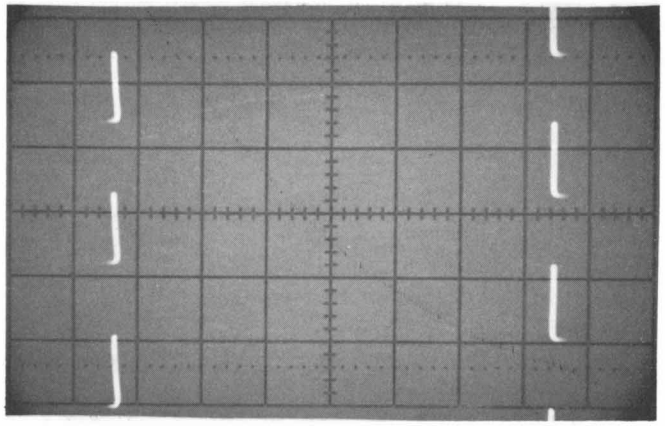

Figure 5-5. Frequency Compensation

g. Set X1 Gain Compensation C213 between mid-range and lowest capacitance and then adjust Input Attenuator Compensation C211 for best square wave.

h. Set:

HORIZONTAL DISPLAY X10

i. Adjust 600-ohm Square Wave Generator output for 8 cm of deflection. Trim C211, if necessary, for best square wave with HORIZONTAL DISPLAY in X1 and X10 positions.

j. Set:

HORIZONTAL DISPLAY. X1
SWEEP TIME . . . . . 10 μSEC/CM

k. Set 600-ohm Square Wave Generator output to maximum and frequency to 40 kc.

m. Adjust X1 Gain Compensation C213 for best square wave.

n. Set:

HORIZONTAL DISPLAY X10

p. Set 600-ohm Square Wave Generator output for 8 cm of deflection.

q. Adjust X10 Gain Compensation C212 for best square wave.

r. Set:

HORIZONTAL DISPLAY. . . 1 VOLT/CM DC

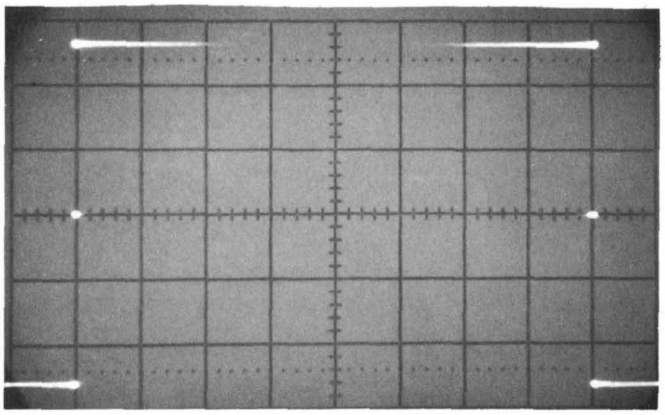

Figure 5-6. Attenuator Compensation
(Top: undercompensated, Middle: compensated, Bottom: overcompensated)

s. Disconnect 600-ohm Square-Wave Generator output from foam-covered wire and connect Generator to HORIZ INPUT. Adjust output amplitude for 8 cm deflection and frequency to 4 kc.

t. Adjust Attenuator Compensation C203 for round dots with no tails (see figure 5-6).

u. Disconnect Square-Wave Generator and jumper from vertical INPUT and sweep-generator printed-circuit board. Connect foam-covered wire to sweep-generator printed-circuit board.

5-47. SWEEP GENERATOR.

5-48. Refer to figure 5-3 for location of adjustments.

5-49. PRESET.

a. Set:

HORIZONTAL DISPLAY X1
SWEEP TIME . . . . . 10 μSEC/CM

b. Connect DC Voltmeter to pin 3 of V109. This voltage will be approximately -40 volts.

c. Rotate SWEEP MODE slowly clockwise while watching Voltmeter. Meter pointer will jump when sweep generator free runs.

d. Note voltage at which sweep generator free runs (maximum negative reading obtained on Voltmeter).

e. Set:

SWEEP MODE . . . . . PRESET

f. Adjust Preset Adj R170 for meter reading of 2.5 volts less negative than voltage noted in step d.

g. Disconnect Voltmeter.

5-50. TRIGGER SENSITIVITY AND SYMMETRY.

a. Set:

SWEEP MODE . . . . . PRESET
TRIGGER SLOPE . . . . . (-)
TRIGGER SOURCE . . . . . EXT AC
HORIZONTAL DISPLAY X1
SWEEP TIME . . . . . 1 MSEC/CM
Vertical SENSITIVITY . . . 0.05 VOLT/CM
Vertical AC-DC . . . . . AC

b. Connect Model 10003A (AC-21M) Probe from vertical INPUT to case of tunnel diode CR102 on sweep-generator circuit board (see figure 5-3). CAUTION: +110 VOLTS present at this point.

c. Connect Calibration Generator to TRIG INPUT and adjust output for 0.05 volt rms.

d. Mechanically center Trigger Symmetry R116, and turn Trigger Sensitivity R120 fully clockwise.

e. Rotate TRIGGER LEVEL to obtain a free running display approximately 0.5 volt in amplitude (see figure 5-7).

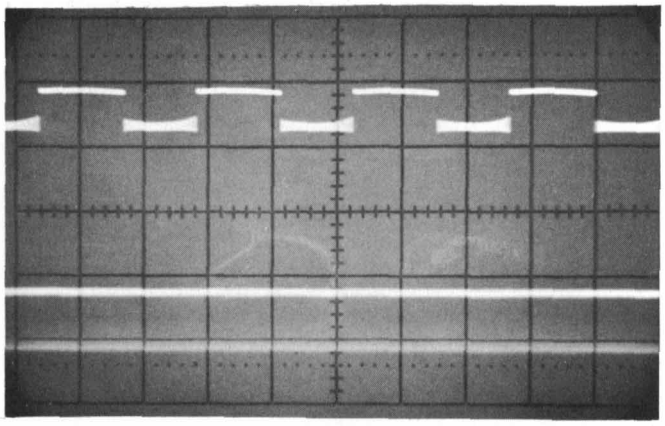

Figure 5-7. Trigger Sensitivity
(Top: Synchronized, Bottom: Free Running)

f. Using TRIGGER LEVEL to maintain a presentation adjust Trigger Sensitivity R120 counterclockwise until a stable, synchronized, symmetrical square wave approximately 0.35 volt in amplitude is obtained (see figure 5-7).

g. Set Calibration Generator output to 0.03 volt rms.

h. The trigger circuit should not trigger solidly. Counterclockwise adjustment of Trigger Sensitivity R120 may be necessary to prevent solid triggering. Rotate TRIGGER LEVEL when checking for solid triggering.

i. Set Calibration Generator output to 0.05 volt rms.

j. The trigger circuit should again trigger solidly. Adjust TRIGGER LEVEL if necessary. Repeat steps f, g, h, and i until circuit triggers solidly with a 0.05-volt rms input and does not trigger solidly with a 0.03-volt rms input.

k. Set:

TRIGGER SLOPE (+)

m. Ground green/orange wire which is connected to TRIGGER SLOPE switch.

n. Adjust Trigger Symmetry R116 for a symmetrical square wave display.

p. Unground green/orange wire. Disconnect probe from CR102 and vertical INPUT. Disconnect Calibration Generator.

5-51. SWEEP LENGTH.

a. Connect Square-Wave Generator 75-ohm output to vertical INPUT, and set frequency to 1 mc.

b. Set:

HORIZONTAL DISPLAY X1
TRIGGER SOURCE . . . . . INT
TRIGGER LEVEL 0
SWEEP MODE . . . . . PRESET
SWEEP TIME . . . . . 1 MSEC/CM

c. Set Square Wave Generator output and vertical SENSITIVITY for approximately 3 cm of deflection.

d. Adjust Sweep Length R161 for 11 cm of sweep.

e. Disconnect Square-Wave Generator.

5-52. SWEEP TIME.

a. Connect Time-Mark Generator to vertical INPUT.

b. Set:

HORIZONTAL DISPLAY X1
SWEEP MODE . . . . . PRESET
TRIGGER SOURCE . . . . . INT

c. Set vertical SENSITIVITY and TRIGGER LEVEL for a suitable display, and set SWEEP TIME and marker interval as shown in table 5-4. Make the corresponding adjustment for the indicated markers per centimeter if necessary.

d. Disconnect Time-Mark Generator.

Table 5-4. Sweep Time

SWEEP TIME	Markers	Adjust	Set for
.1 μSEC/CM	10 mc	C125	1 cycle/cm
.2 μSEC/CM	5 mc	C1016	1 cycle/cm
.5 μSEC/CM	1 μsec	C1014	1 marker/2 cm
1 μSEC/CM	1 μsec	C1012	1 marker/cm
10 μSEC/CM	10 μsec	C1010	1 marker/cm
.1 MSEC/CM	100 μsec	R1005	1 marker/cm
1 MSEC/CM	1 msec	R1004	1 marker/cm
10 MSEC/CM	10 msec	R1003	1 marker/cm
.1 SEC/CM	100 msec	R1002	1 marker/cm

5-53. VERTICAL AMPLIFIER.

5-54. Refer to figure 5-2 for location of adjustments.

5-55. GAIN.

a. Install Model 10404A Vertical Test Adapter into vertical plug-in connector J1 in place of vertical plug-in unit.

b. Connect 1.0 volt peak-to-peak from Calibration Generator to Test Adapter and adjust position control on adapter for on-scale trace.

c. Adjust Gain R45 for 5 cm deflection.

d. Remove Test Adapter and install vertical plug-in unit.

5-56. SCAN RESPONSE.

a. Connect Square-Wave Generator 75-ohm output to vertical INPUT and set frequency to 50 kc.

b. Set Square-Wave Generator 75-ohm output and vertical SENSITIVITY for 6 cm of deflection.

c. Trigger Test Oscilloscope with 600-ohm output of Square-Wave Generator.

d. Remove horizontal plug-in unit from Model 175A and install Test Plug described in paragraph 5-28.

e. Observe signal on pin 15 of horizontal plug-in connector J105. Use probe on Test Oscilloscope to minimize loading.

f. Adjust Scan Response C36 for best square wave as viewed on Test Oscilloscope.

g. Observe signal on pin 13 of horizontal plug-in connector J105.

h. Adjust Scan Response C37 for best square wave as viewed on Test Oscilloscope.

i. Set frequency of Square-Wave Generator to 1 mc.

j. Observe signal on pin 10 of Test Plug.

k. Adjust Scan Balance C33 for best balance as viewed on Test Oscilloscope (see figure 5-8).

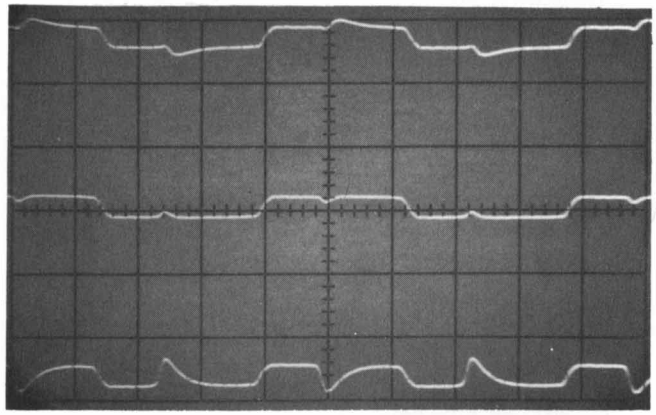

Figure 5-8. Scan Balance (Top: Unbalanced Middle: Balanced, Bottom: Unbalanced)

m. Disconnect Test Oscilloscope and Square-Wave Generator.

n. Remove Test Plug and install horizontal plug-in unit.

5-57. PULSE RESPONSE.

a. Remove vertical plug-in unit and install Model 10405A Vertical Response Tester.

b. Set Test Plug-In Unit for a positive pulse output 5 cm in amplitude.

c. Set:

SWEEP TIME . . . . . 0.5 μSEC/CM
TRIGGER SOURCE . . . . . INT
TRIGGER SLOPE . . . . . (+)
SWEEP MODE . . . . . PRESET
HORIZONTAL DISPLAY X1

d. Set TRIGGER LEVEL for stable display and adjust Mid Freq. Response C22 to drop leading corner of pulse about 0.2 cm (see figure 5-9).

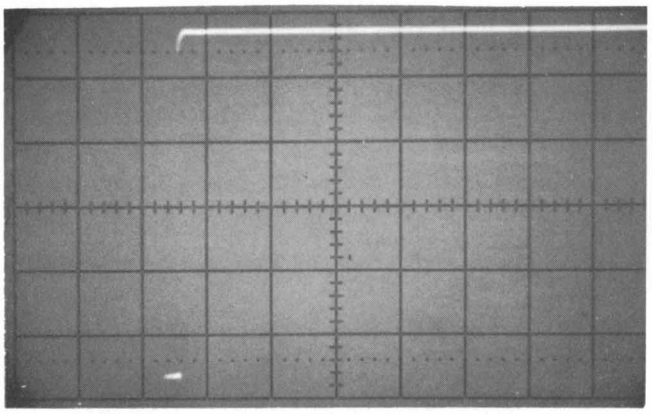

Figure 5-9. Mid-Frequency Response Preliminary Adjustment

e. Adjust Low Freq Response C35 for best flat top pulse.

f. Readjust Mid Freq Response C22 for best pulse response (see figure 5-10).

g. Set:

SWEEP TIME . . . . . 0.1 μSEC/CM

h. Adjust Hi Freq Response L7 and L8 for best high frequency corner (see figure 5-11).

i. Remove Test Plug-In and install vertical plug-in.

5-58. CALIBRATOR.

a. Connect Calibration Generator to vertical INPUT and set output to 10 volts peak-to-peak.

b. Set:

HORIZONTAL DISPLAY. X1
SWEEP TIME . . . . . 0.5 MSEC/CM
TRIGGER SOURCE . . . . . INT
TRIGGER LEVEL 0
SWEEP MODE. . . . . PRESET
Vertical SENSITIVITY . . . . . 1 VOLT/CM

c. Set vertical sensitivity VERNIER for exactly 6 cm of deflection.

d. Disconnect Calibration Generator and connect vertical INPUT to CALIBRATOR 10 VOLT output.

e. Adjust Cal Volt Adj R375 for exactly 6 cm of deflection.

f. Disconnect CALIBRATOR from vertical INPUT.

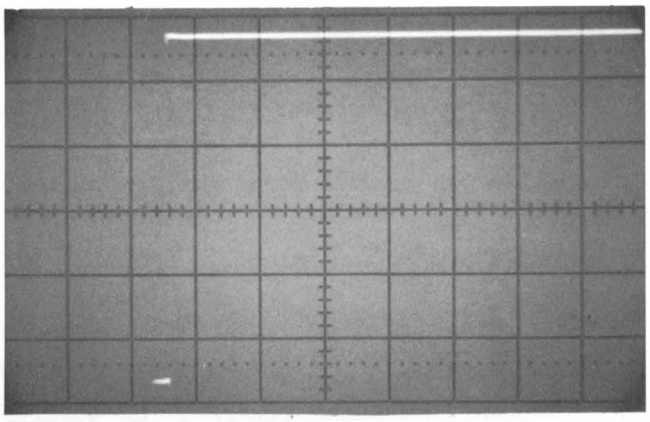

Figure 5-10. Mid-Frequency Response Final Adjustment

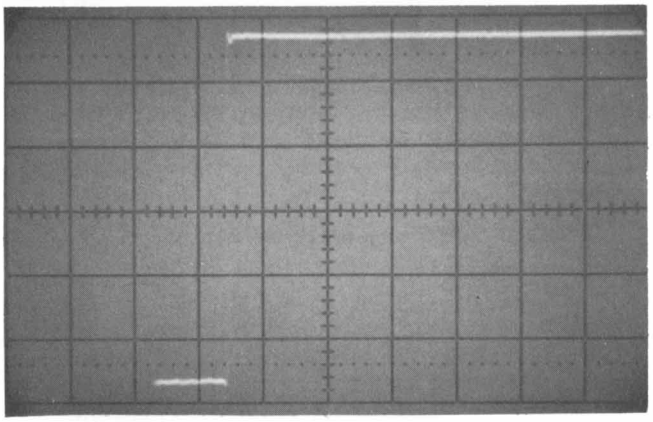

Figure 5-11. High-Frequency Response

5-59. REPAIRS.

5-60. The Model 175A uses edge-on connectors for most connections to the boards. The assembly may be removed in a few moments for access to otherwise hidden components. When removing or replacing edge-on connectors be careful to align the connector properly with its guide slot. Applying force with the connector improperly aligned may spring the contacts and result in a poor connection.

5-61. EQUIPMENT REQUIRED.

5-62. In general, miniaturized equipment calls for miniature tools. The following are particularly important:

a. Low-heat soldering iron (25 to 50 watts). Idling temperature must be no more than 800°F.

b. Small soldering iron tip (1/16 to 3/32 inch).

c. Small-diameter rosin-core solder.

d. Wooden toothpick.

5-63. The low-heat iron is required in order to protect solid-state devices from too high a temperature, and to avoid causing conductors to lift from the printed circuit boards. The small tip will transfer less heat to the component, yet will be adequate to melt the solder. Small-diameter solder melts more quickly, reducing the length of time that heat must be applied. The toothpick is essential for cleaning out mounting holes after removing a component. Do not attempt repairs on the Model 175A unless the above equipment is on hand.

5-64. PROCEDURE.

5-65. The Model 175A has plated-through circuit boards. Each component mounting hole is plated through in order to provide electrical conduction from one side of the board to the other and to provide a better solder bond between the circuit and the component. The plating is easily damaged by reaming the hole with a metal tool, or by forcing component leads into the hole. The use of the wooden toothpick for cleaning out solder, and ordinary care in replacing the component, will result in a satisfactory job.

5-66. REPLACING TRANSISTORS. Solid-state diodes and transistors require special handling, in that they are sensitive to both heat and electrical overload. Use long-nose pliers between the iron and the device as a heat sink. Hold the pliers for a moment after the iron is removed to allow the joint to cool. Be sure there is no electrical leakage from iron to work. Such leakage can damage transistors.

5-67. TROUBLESHOOTING.

5-68. ISOLATING TROUBLES TO A MAJOR SECTION.

5-69. The following check may be performed whenever instrument malfunction is suspected.

a. Set:

HORIZONTAL DISPLAY . . 1 VOLT/CM AC
EXTERNAL VERNIER . . . . . CAL
Vertical SENSITIVITY . . . 2 VOLTS/CM
Vertical Sensitivity VERNIER . . . . . CAL

b. Depending on the model number of the horizontal plug-in unit, set controls as follows:

Model 1780A:
SWEEP OCCURRENCE . . . NORMAL
Model 1781A/B:
SWEEP SELECTOR . . MAIN SWEEP
Model 1782A:
FUNCTION . . . . . OFF
Model 1783A:
MARKER . . . . . OFF

c. Depress BEAM FINDER.

d. A defocused spot should appear on the crt.

e. If proper display is obtained, it is likely that the power supplies are operating properly. If no spot appears, troubleshoot the power supplies (paragraphs 5-70 and 5-77) and the amplifiers (paragraphs 5-81 and 5-93).

f. Connect CALIBRATOR 10 VOLT output to vertical INPUT and HORIZ INPUT.

g. A tilted straight line pattern with a 10-cm horizontal deflection and 5-cm vertical deflection should be obtained.

h. If proper display is obtained, it is likely that the horizontal amplifier, vertical amplifier, and calibrator are operating properly.

i. Set:

HORIZONTAL DISPLAY X1
SWEEP MODE . . . . . PRESET
SWEEP TIME . . . . . 1 MSEC/CM
Sweep VERNIER . . . . . CAL
TRIGGER LEVEL 0
TRIGGER SOURCE . . . . . INT

j. A synchronized square wave pattern 5 cm high should be obtained.

k. If proper display is obtained, it is likely that the sweep generator is operating properly.

5-70. LOW-VOLTAGE POWER SUPPLIES.

5-71. The transistors used in the power supply are located on the power-supply printed-circuit board and fan-shroud assembly. The series-regulator transistors are power transistors mounted on heat sinks on the fan-shroud assembly. The amplifier and other transistors are mounted on the printed circuit board (figure 5-32).

5-72. If maintenance on the fan-shroud assembly is required, it may easily be removed from the instrument by removing the mounting screws on rear gusset. However, power supply malfunctions can generally quickly be isolated to components either on the printed circuit board or on the fan-shroud assembly, thus eliminating unnecessary removal of the fan-shroud assembly.

5-73. Nominal voltages at key points in the supply are given on the Low-Voltage Power-Supply schematic diagram, figure 5-33.

5-74. The cause of excessive output ripple on any of the supplies can be isolated in the following manner. Measure the ripple at the output of the rectifiers of the supply in question. Compare the measurement with the value given on the schematic diagram, figure 5-33. If the ripple is excessive, check the input filter capacitors and bleeder resistors. If the input ripple is normal, the cause is most likely low gain in the amplifier transistors.

5-75. Table 5-5 gives troubleshooting aids for locating causes of loss of regulation in each supply.

5-76. The balance between the +6.3 volt and -6.3 volt supply outputs and ground is determined by the supply load. The load is a series-parallel arrangement of tube heaters, diagrammed in figure 5-34. An unbalanced output voltage can usually be traced to an open or shorted tube heater or a wrong type tube.

Table 5-5. Troubleshooting the Low-Voltage Supply

Supply	Symptom	Procedure	Effect	Trouble
-100V	High output	Disconnect base lead of Q461 from printed circuit board. This is the yellow lead which connects to rear edge of board adjacent to fan motor.	Output remains high	Q461 shorted
			Voltage drops	Q461 good
		Reconnect yellow wire to printed circuit board and short collector of Q464 to emitter.	Output remains high	Q462 shorted
			Voltage drops	Q464 open
	Low output	Short collector of Q462 to emitter	Output remains low	Q461 open
			Voltage rises	Q461 good
		Remove short from Q462 and measure voltage across CR465	0 volt	CR465 shorted
			6 volts	CR465 good
		Measure voltage across R470	Within 10 volts of output	Q463 open or C466 shorted
			Less than output	Q463 and C466 good
		Measure voltage from collector of Q464 to emitter	0 volt approx 10 volts	Q464 shorted Q464 good
+110V	High output	Check -100 volt supply output	Normal	Trouble in +110V supply
			Abnormal	Trouble in -100V supply
		Disconnect base lead of Q442 from printed circuit board. This is the white lead which connects to rear edge of board adjacent to fan motor.	Output remains high	Q441 or Q442 shorted
			Voltage drops	Q441 and Q442 good
		Reconnect white lead and measure voltage from collector of Q443 to emitter	0 volt	Q443 shorted
			Greater than 2 volts	Q443 good
		Measure voltage from collector of Q444 to emitter	0 volt	Q444 shorted
			Greater than 2 volts	Q444 good
	Low output	Check -100 volt supply output	Normal	Trouble in +110V supply
			Abnormal	Trouble in -110V supply
		Short collector of Q443 to emiiter	Output remains low	Q441 or Q442 open
			Voltage rises	Q441 and Q442 good

Table 5-5. Troubleshooting the Low-Voltage Supply (Cont'd)

Supply	Symptom	Procedure	Effect	Trouble
+ 110V cont'd	Low output	Remove short from Q443 and short collector of Q444 to emitter	No change	Q443 open
			Voltage rises	Q444 open
		Remove short from Q444 and measure voltage at base of Q444	Positive	C445 shorted or leaky
+ 370V	High output	Check -100 volt supply output	Normal	Trouble in + 110V or + 370V supply
			Abnormal	Trouble in -100V supply
		Check + 110 volt supply output	Normal	Trouble in + 370V supply
			Abnormal	Trouble in + 110V supply
		Disconnect base lead of Q423 from printed circuit board. This is orange lead which connects rear edge of board adjacent to fan motor.	Output remains high	Q421, Q422, or Q423 shorted
			Output voltage drops below + 370 volts	Q421, Q422, and Q423 good
		Reconnect orange lead and measure voltage from collector Q424 to emitter	0 volt	Q424 shorted
			Greater than 2 volts	Q424 good
		Measure voltage from collector of Q425 to emitter	0 volt	Q425 shorted
			Greater than 2 volts	Q425 good
	Low output	Check -100 volt supply output	Normal	Trouble in + 110 or + 370V supply
			Abnormal	Trouble in -100V supply
		Check + 110 volt supply output	Normal	Trouble in + 370V supply
			Abnormal	Trouble in + 110V supply
		Short collector of Q424 to emitter	Output remains low	Q421, Q422, or Q423 open
			Output rises	Q421, Q422, or Q423 good
		Remove short from Q424 and measure voltage across CR425	0 volt	CR425 shorted
			6 volts	CR425 good
		Short collector of Q425 to emitter	Output remains low	Q424 open
			Output rises	Q425 open
± 6.3V	High output (Voltmeter from + 6.3V to -6.3V output)	Check -100 volt supply output	Normal	Trouble in ± 6.3V supply
			Abnormal	Trouble in -100V supply
		Disconnect base lead of Q482 from printed circuit board. This is the blue lead which connects to front edge of board adjacent to V461, the 5651 reference tube.	Output remains high	Q481 or Q482 shorted
			Output drops	Q481 and Q482 good

Table 5-5. Troubleshooting the Low-Voltage Supply (Cont'd)

Supply	Symptom	Procedure	Effect	Trouble
±6.3V cont'd		Reconnect blue wire and measure voltage from collector of Q483 to emitter	0 volt	Q483 shorted
			Greater than 2 volts	Q483 good
		Short collector of Q484 to emitter	Output drops	Q484 open
	Low output (Voltmeter from +6.3V to -6.3V output)	Check -100 volt supply output	Normal	Trouble in ±6.3V supply
			Abnormal	Trouble in -100V supply
		Short collector of Q483 to emitter	Output remains low	Q481 or Q482 open
			Output rises	Q481 and Q482 good
		Remove short from Q483 and measure voltage from collector of Q483 to emitter	Greater than 10 volts	Q483 open
			Approx 2.5 volts	Q483 good
		Measure voltage from collector of Q484 to emitter	0 volt	Q484 shorted
			Greater than 2 volts	Q484 good
		Measure voltage across CR483	0 volt	CR483 shorted
			6 volts	CR483 good

5-77. HIGH-VOLTAGE POWER SUPPLY.

5-78. Waveforms and dc voltages are given as a troubleshooting aid on the high-voltage power-supply schematic diagram, figure 5-31.

5-79. The cause of an output voltage which is too high or too low can best be isolated by measuring dc voltages. Start with the resistor divider string composed of resistors R328 through R337. Then check voltages on regulator tube V306 and rf oscillator tube V301.

5-80. The cause of loss of regulation can also best be isolated by this method. A change in the crt cathode voltage in the positive direction should be sensed by V306 and appear as a positive change at the screen grid, pin 9, of V301. The plate voltage of V301 should then increase accordingly. Likewise, a negative change in crt cathode voltage should cause the plate voltage of V301 to decrease.

5-81. VERTICAL AMPLIFIER.

5-82. As a troubleshooting aid, nominal dc voltages and signal waveforms are given on the vertical-amplifier schematic diagram, figure 5-18.

5-83. UNBALANCE. Unbalance in direct-coupled differential amplifier V1-V4 and V7-V9 can be isolated by measuring the dc voltages on the various tube elements. In order to eliminate the effect of any unbalance in the vertical plug-in unit, short pins 2 and 7 of V1 together. Since a properly operating differential amplifier has equal voltages on each side of the amplifier, another method may be used to isolate an unbalanced stage. Proceed as outlined in table 5-6.

5-84. IMPROPER GAIN. Insure that the vertical plug-in unit gain is correct and that the gain of the amplifier cannot be set properly by adjusting Gain Control R45. If not, mechanically center R45, and set up the conditions of waveform measurements given in the vertical-amplifier schematic diagram notes, figure 5-18. To isolate the cause of abnormal gain, check the gain of each stage of the amplifier against the waveforms given in figure 5-18 starting from the input.

5-85. COMPRESSION. The compression of the vertical amplifier can be checked in the following manner:

a. Connect a 1-kc sine wave signal to vertical INPUT.

b. Connect a high-impedance ac voltmeter isolated from ground to the vertical crt deflection plates, D3 and D4. CAUTION: +300 VOLTS present on both terminals.

c. Vertically center the trace on the crt, and adjust the sine wave amplitude and vertical SENSITIVITY for a reading of 1.0 volt on voltmeter.

d. Position the trace to the top of graticule.

e. The voltmeter reading should be 1.0 volt ±0.05 volt.

f. Position the trace to the bottom of graticule.

g. The voltmeter reading should be 1.0 volt ±0.05 volt.

Table 5-6. Vertical Amplifier Troubleshooting

Procedure	Effect	Trouble
Short pin 6 of V8 and pin 6 of V9 together	Trace does not center Trace centers	High- or low-voltage power supply, or crt Before crt
Remove short from V8 and V9 and short pins 3 and 8 of V7 together	Trace does not center Trace approx centers	V8, V9, V10 Before V8 and V9
Remove short from pins 3 and 8 and short pins 2 and 7 of V7 together	Trace does not center Trace approx centers	V7 Before V7
Remove short from V7 and short pins 2 and 7 of V4 together	Trace does not center Trace approx centers	V4 Before V4
Remove short from V4 and short pins 2 and 7 of V3 together	Trace does not center Trace approx centers	V3 Before V3
Remove short from V3 and short pins 2 and 7 of V2 together	Trace does not center Trace approx centers	V2 Before V2
Remove short from V2 and short pins 2 and 7 of V1 together	Trace does not center Trace approx centers	V1 Vertical plug-in unit

5-86. If the amplifier exhibits excessive compression, the cause can be isolated by moving the voltmeter to the grids of the preceding stage and repeating steps c through g. Move the voltmeter from the deflection plates to pin 2 of V8 and V9; then to pins 2 and 7 of V7; then to pins 2 and 7 of V4, etc. When a correct compression reading is obtained, the trouble is located between that particular measurement point and the preceding one.

5-87. SWEEP GENERATOR.

5-88. Nominal dc voltages and waveforms are given as a troubleshooting aid on the sweep-generator schematic diagram, figure 5-22.

5-89. If the sweep generator operates properly when the SWEEP MODE control is in FREE RUN but not in TRIGGER or PRESET, the problem is most likely associated with V101, CR102, Q103, or R170.

5-90. If the sweep generator does not operate properly with the SWEEP MODE control in FREE RUN, ensure that the problem is not in the horizontal amplifier by checking the horizontal amplifier for proper operations.

5-91. If the problem is in the sweep generator, it is most likely associated with V103 through V107 or V109. Since this circuit utilizes feedback, the problem can most easily be isolated by forcing the sweep generator to remain in one of its two states. One state is known as the sweep completed state. In this state the output remains at the peak level of the normally present sweep voltage. The other state is known as the reset state. In this state, the output remains at the starting level of the normally present sweep voltage.

5-92. To troubleshoot the sweep generator, put the sweep generator in each of these states as explained in table 5-7 and check the dc voltages against the values given in table 5-7. A 10% or 15% variation from the values given can be expected; however, larger variations indicate a source of trouble.

Table 5-7. Sweep Generator Troubleshooting Guide

Test Point	Sweep Completed*	Reset**
V103 Pin 7	-100	0
V103 Pin 6	+110	+6.5
V103 Pin 3	+52	-24
V103 Pin 3	+52	-20
V104 Pin 2	-16	-52
V104 Pin 3	-17	-2.1
V104 Pin 1	-6	-3.8
V104 Pin 7	-52	-51
V104 Pin 8	+80	-50
V106 Pin 9	-6.4	-4.4
V106 Pin 6	+310	+70
V107 Pin 2	+81	-56
V107 Pin 3	+81	-50
V105 Pin 7	-6.7	-74
V105 Pin 8	-1.1	-65
V109 Pin 8	-100	0
V109 Pin 3	-100	0

* Sweep Completed: Remove V109 from socket.
** Reset: Remove V109 from socket and ground pin 7 of V103

Table 5-8 Horizontal Amplifier Troubleshooting

Procedure	Effect	Trouble
Connect DC Voltmeter to pin 2 of V204. Adjust HORIZONTAL POSITION for reading of 0 volt.	0 volt reading impossible Correct reading	R262 or V203 Input circuitry good
Measure voltages at pin 1 of V204 and pin 1 of V205.	Voltages unequal Voltages approx equal	V204 or V205 V204 and V205 good
Measure voltages at pins 3 and 8 of V208.	Voltages unequal Voltages approx equal	V208 or V209 V208 and V209 good

5-93. HORIZONTAL AMPLIFIER.

5-94. Signal waveforms and their associated dc levels are given as a troubleshooting aid on the horizontal-amplifier schematic diagram, figure 5-28.

5-95. If the horizontal amplifier appears to operate properly with the HORIZONTAL DISPLAY in any of the external input positions, but not in internal sweep positions, the trouble is most likely in the sweep generator.

5-96. If the horizontal amplifier appears to operate properly with the HORIZONTAL DISPLAY in the internal sweep positions, but not in any of the external input positions, the trouble is most likely associated with the horizontal input amplifier.

5-97. UNBALANCE. The cause of unbalance in the horizontal amplifier will most likely be associated with V204, V205, V208, or V209 since these are the only stages connected in the differential configuration. Measurement of dc voltages on each side of the amplifier is the best method to use to isolate the cause of unbalance because of the feedback used in the amplifier. Proceed as in table 5-8.

5-98. GAIN. If the amplifier has the wrong gain ensure that it cannot be corrected by adjusting Gain Adj R213, X1 Gain Adj R225, or X10 Gain Adj R227. The waveforms given on the schematic diagram, figure 5-28, provide information on the gain of each stage. Start at the input and proceed toward the deflection plates.

5-99. CATHODE RAY TUBE REPLACEMENT.

5-100. To replace the crt in the Model 175A, proceed as follows:

WARNING

To prevent injury to eyes and hands if crt breaks, wear plastic face mask or goggles and insulated gloves. Handle the crt with extreme care.

a. Remove top cover of instrument.

b. Remove all leads connected to neck of crt (see figure 5-12).

c. Remove post accelerator cap from crt (located near front of crt case).

d. Carefully remove bakelite plug from base of crt.

e. Remove screws from clamp at base of crt and remove top half of clamp. If necessary loosen bottom half of clamp.

f. Remove front panel crt bezel.

g. Carefully slide crt out through front panel hole. Light mask removes with crt.

h. Installation of replacement crt is essentially the reverse of removal procedure described above. Refer to figure 5-2 for correct connection of deflection leads. Do not over-tighten base clamp or tube may be damaged. Before tightening clamp, rotate crt until bottom of graticule is parallel with bottom of front panel and be sure light mask just touches bezel.

i. Obtain a free running trace and adjust TRACE ALIGNMENT until trace is aligned with horizontal lines of graticule.

j. Make checks and adjustments, if necessary, referred to in the following paragraphs in the order given: 5-37 through 5-39, 5-42 through 5-46, 5-51, 5-52, and 5-55 through 5-57.

Table 5-9. Condensed Adjustment Procedure

Test	Ext Equip Required	Procedure	Adjust
1. Low Voltage Power Supplies	DC vtvm, 1% accuracy	Measure supply outputs. Should be: -100v ±3v +110v ±3v +370v ±10v +6.3v ±.2v -6.3v ±.2v	R472 (-100) R451 (+110) R433 (+370) R486 (+6.3) R486 (-6.3)
2. High Voltage Power Supply	DC vtvm, 3000v, 8% accuracy	Measure HV output. Should be: -2700v ±100v	R328 HV Adj.
3. Astigmatism	None	Obtain low-intensity spot	FOCUS and Astigmatism Adj. R340 for small round spot.
4. Pattern	Signal Generator, 5 Mc.	Obtain full 6-cm display	Pattern Adj. R345 for squarest pattern
5. X1 Horiz Gain	Calibration Generator	a. Disconnect foam covered wire on sweep board. (See Figure 5-3) b. Apply 50v p-p to sweep amplifier input (wire).	X1 Gain Adj. R225 for 5.5 cm deflection. Sweep remains disconnected for steps 5 thru 13.
6. X10 Horiz Gain	Calibration Generator	Apply 5v p-p to sweep amplifier input (wire).	X10 Gain Adj. R227 for 5.5 cm deflection.
7. Magnifier Centering	None	HORIZ DISPLAY X10. Center spot on CRT.	Magnifier Centering R230 for no spot shift when switching between X1 and X10.
8. External Balance	None	HORIZ DISPLAY 0.1 DC. Center spot on CRT.	External Balance R212 for no spot shift while rotating EXTERNAL VERNIER.
9. External Gain	Calibration Generator	1v p-p to HORIZ INPUT.	Gain Adj. R213 for 10 cm deflection.
10. Horiz Frequency Compensation	Square Wave Generator	a. Apply 50v 4kc square wave to sweep amplifier input (wire). b. Connect sweep output from board to vertical INPUT (10V/CM) SWEEP TIME 0.1 MSEC/CM. c. Trigger externally on square wave.	Input Attenuator Compensation C211 for best square wave. Check X10 position, and trim C211 if necessary.
11. X1 Gain Compensation	Square Wave Generator	HORIZ DISPLAY X1. SWEEP TIME 10 μSEC/CM. Square wave frequency to 40 kc.	X1 Gain Compensation C213 for best square wave.
12. X10 Gain Compensation	Square Wave Generator	HORIZ DISPLAY X10. Generator amplitude for 8 cm deflection.	X10 Gain Compensation C212 for best square wave.
13. Attenuator Compensation	Square Wave Generator	HORIZ DISPLAY 1.0 DC. Apply 4 kc square wave to HORIZ INPUT. Amplitude 8 cm.	Attenuator compensation C203 for round dots with no tails. (Reconnect sweep lead disconnected in step 5).
14. Sweep Preset	DC Voltmeter	HORIZ DISPLAY X1. SWEEP TIME 10 μSEC/CM. Note maximum negative voltage at pin 3 of V109 while rotating SWEEP MODE clockwise. Then set to PRESET.	Preset Adj. R170 for reading of 2.5 volts less negative than voltage noted.

Table 5-9. Condensed Adjustment Procedure (Cont'd)

Test	Ext Equip Required	Procedure	Adjust
15. Trigger Sensitivity	Calibration Generator	a. SWEEP MODE..... PRESET TRIGGER SLOPE ..... (-) SWEEP TIME...1 MSEC/CM SENSITIVITY... 0.05 V/CM b. Apply .05 vrms to TRIG INPUT (EXT AC) c. Connect probe to case of CR102. d. Center Trigger Symmetry R116; Trigger Sensitivity R120 fully cw (or ccw in some instruments).	a. Rotate TRIGGER LEVEL for free-running display. b. Trigger Sensitivity R120 (with TRIGGER LEVEL) for stable, symmetrical square wave. c. If necessary, rotate R120 ccw to prevent solid triggering on .03 vrms input.
16. Trigger Symmetry	Calibration Generator	a. Complete step 15. b. Set TRIGGER SLOPE TO (+). c. Briefly ground grn/orn wire on SLOPE switch.	Trigger Symmetry R116 for symmetrical square wave.
17. Sweep Length	Square Wave Generator	Display 1 Mc square wave at 1 MSEC/CM.	Sweep Length R161 for 11 cm of sweep
18. Sweep Time	Time Mark Generator	Sweep Time / Markers .1 μSEC/CM — 10 Mc .2 μSEC/CM — 5 Mc .5 μSEC/CM — 1 μsec 1 μSEC/CM — 1 μsec 10 μSEC/CM — 10 μsec .1 MSEC/CM — 100 μsec 1 MSEC/CM — 1 msec 10 MSEC/CM — 10 msec .1 SEC/CM — 100 msec	Adjustment C125 C1016 C1014 C1012 C1010 R1005 R1004 R1003 R1002
19. Vertical Gain	Vertical Test Adapter; Calibration Generator	Apply 1v p-p through Test Adapter to vertical amplifier	Gain R45 for 5 cm deflection
20. Scan Response	Test Plug; Square Wave Generator; Test Oscilloscope	Display 6 cm of 50 kc square wave, then install Test Plug (Figure 5-1). Trigger Test Oscilloscope on square wave.	a. Scan Response C36 for best square wave observed at pin 15 of J105; b. Scan Response C37 for best square wave at pin 13.
21. Scan Balance	Test Plug; Square Wave Generator; Test Oscilloscope	Complete step 20. Increase square wave frequency to 1 Mc.	Scan Balance C33 for balanced waveform observed at pin 10 of Test Plug. (Replace horizontal plug-in).
22. Pulse Response	Vertical Response Tester	Observe positive pulse step at 0.5 μSEC/CM.	a. Mid Freq. Response C22 to drop leading corner 0.2 cm. b. Low Freq. Response C35 for flat pulse top. c. Mid Freq. Response C22 for best pulse response.
23. High Frequency Response	Vertical Response Tester	Complete step 22. Increase SWEEP TIME to 0.1 μSEC/CM.	Hi Freq. Response L7 and L8 for best high frequency corner. (Replace vertical plug-in).
24. Calibrator	Calibration Generator	a. Generator output 10v p-p SENSITIVITY 1 V/CM. b. Reduce vertical deflection to exactly 6 cm with VERNIER.	a. Connect CALIBRATOR 10 VOLT output to INPUT. b. Cal Volt Adj R375 for exactly 6 cm deflection.

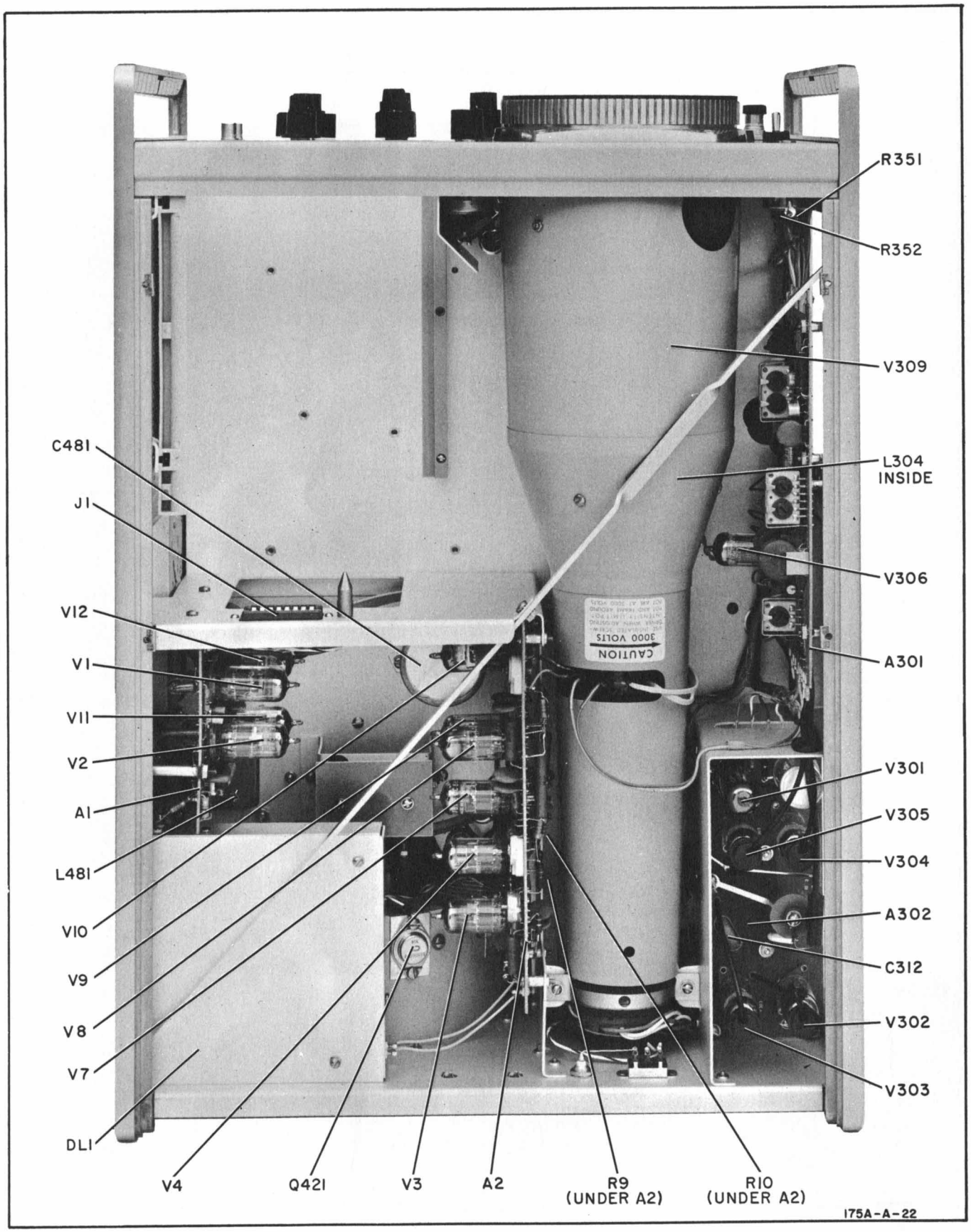

Figure 5-12. Model 175A Component Locations, Top View

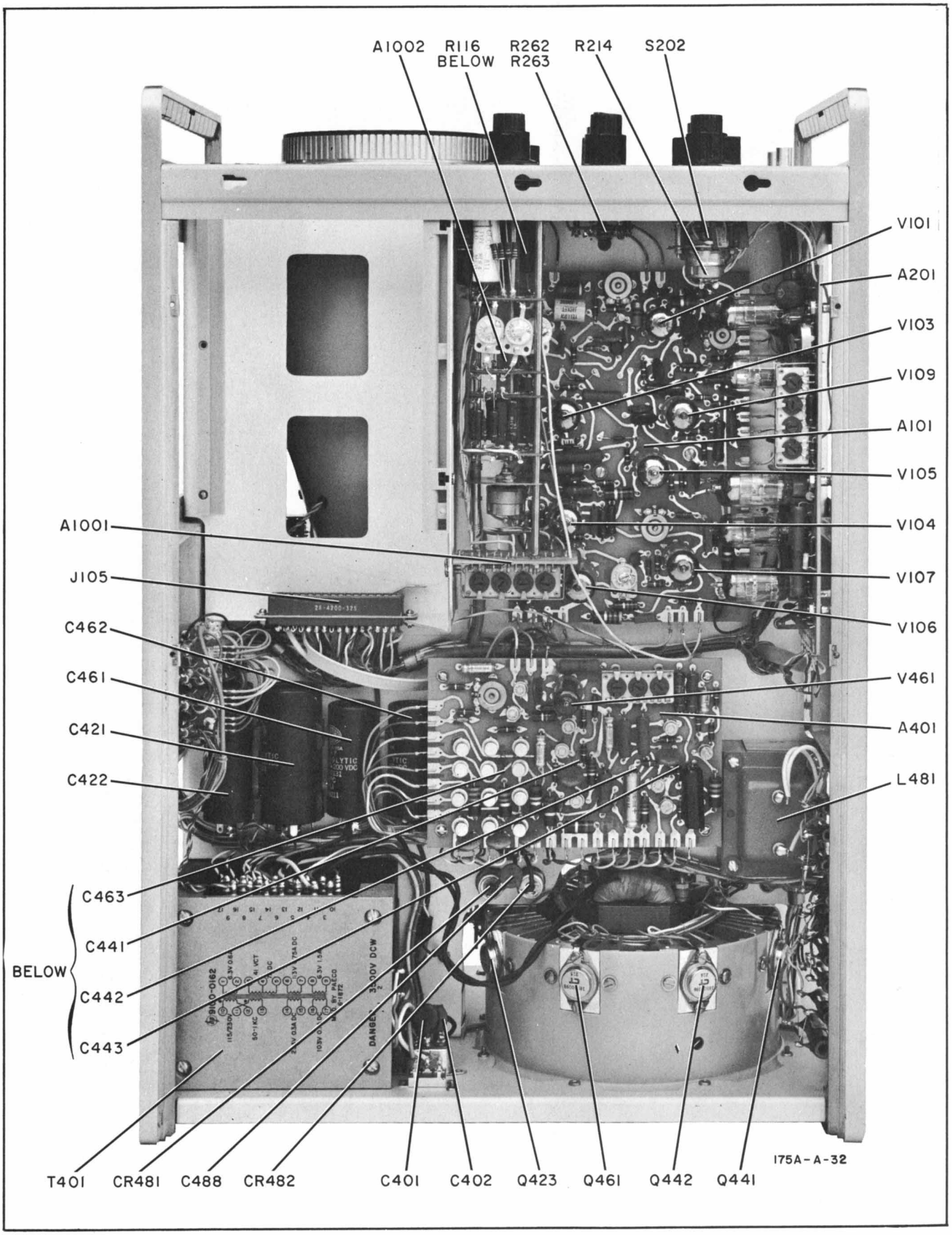

Figure 5-13. Model 175A Component Locations, Bottom View

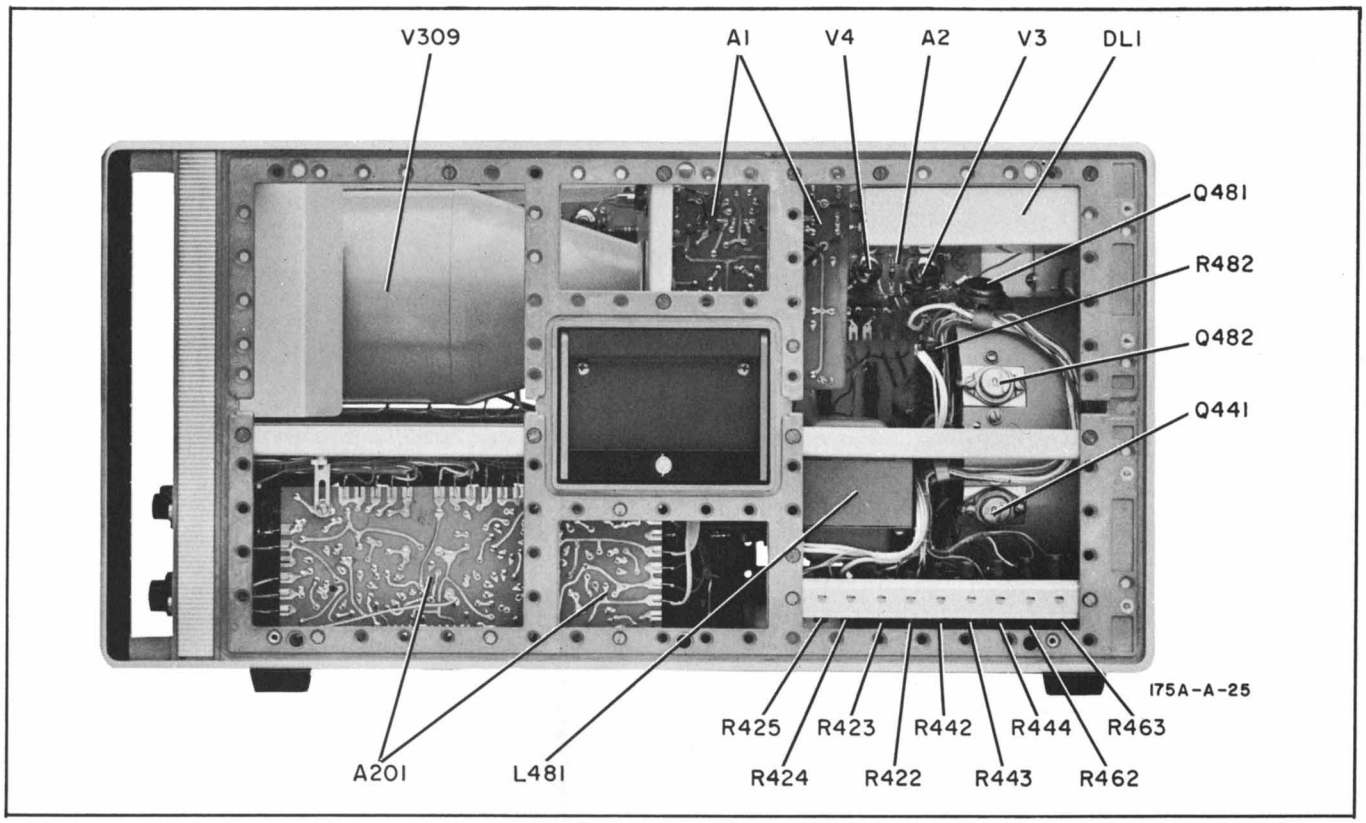

Figure 5-14. Model 175A Component Locations, Right Side View

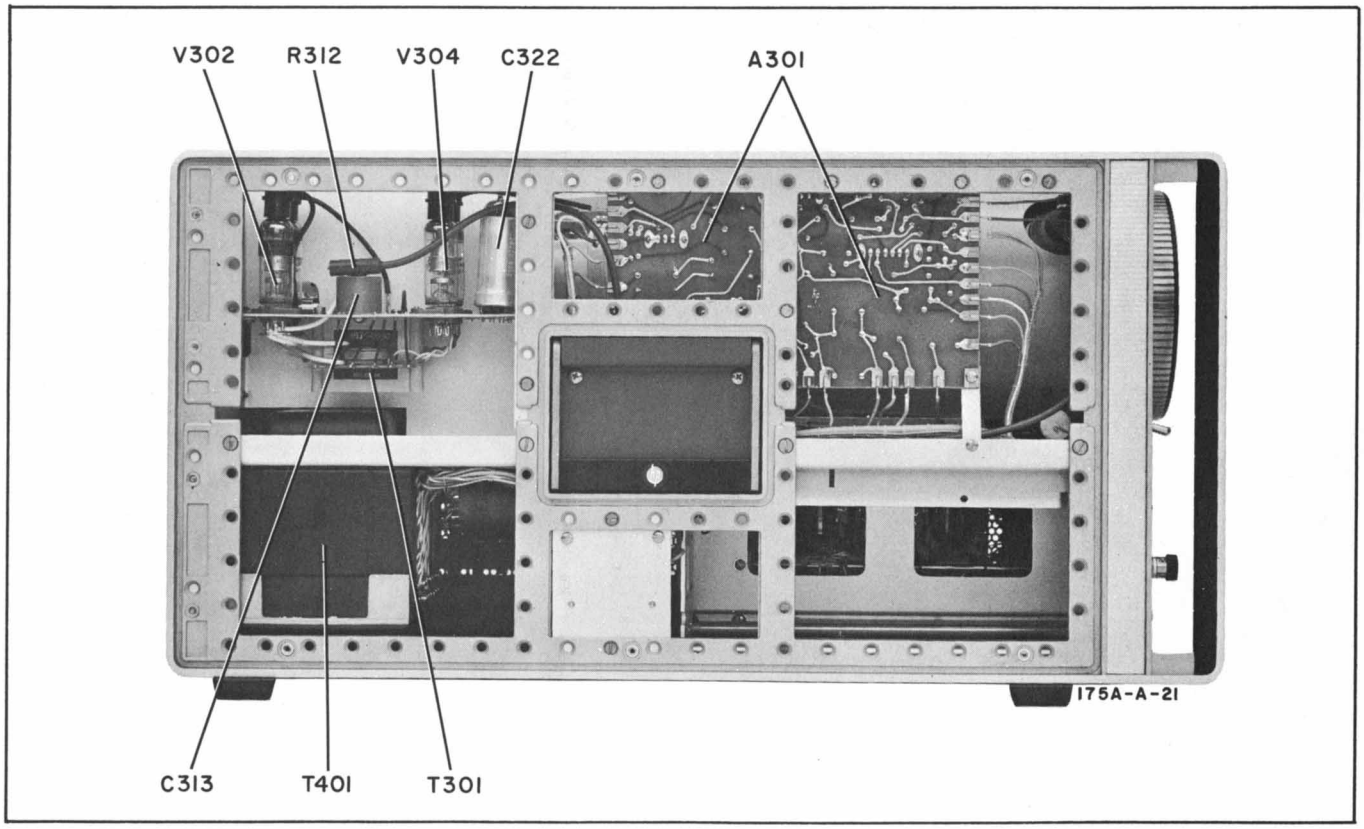

Figure 5-15. Model 175A Component Locations, Left Side View

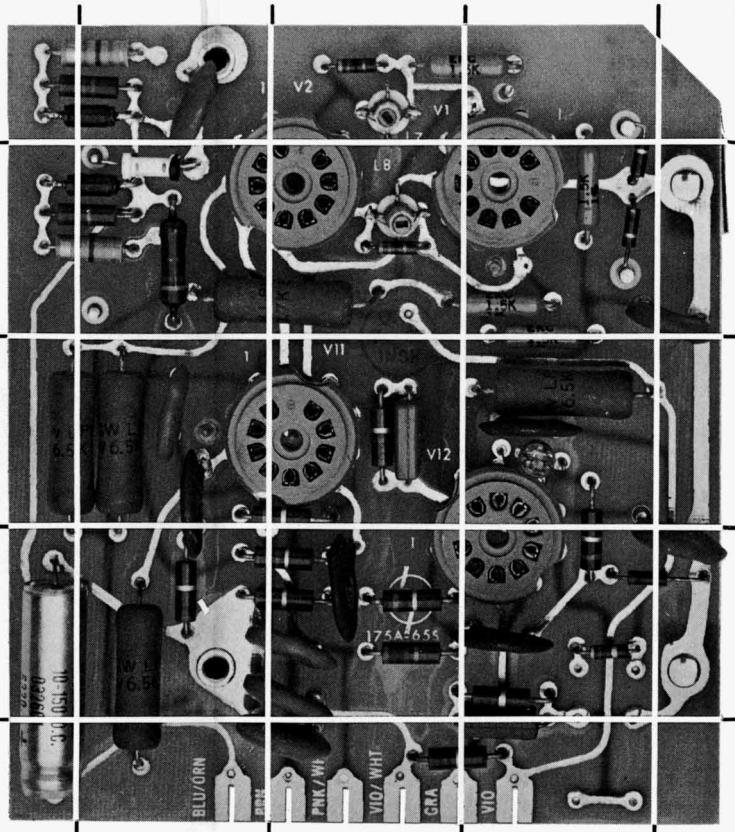
V2
V1
L8
V11
V12
175A-655
BLU/ORN
BRN
PNK/WH
VIO/WHT
GRA
VIO

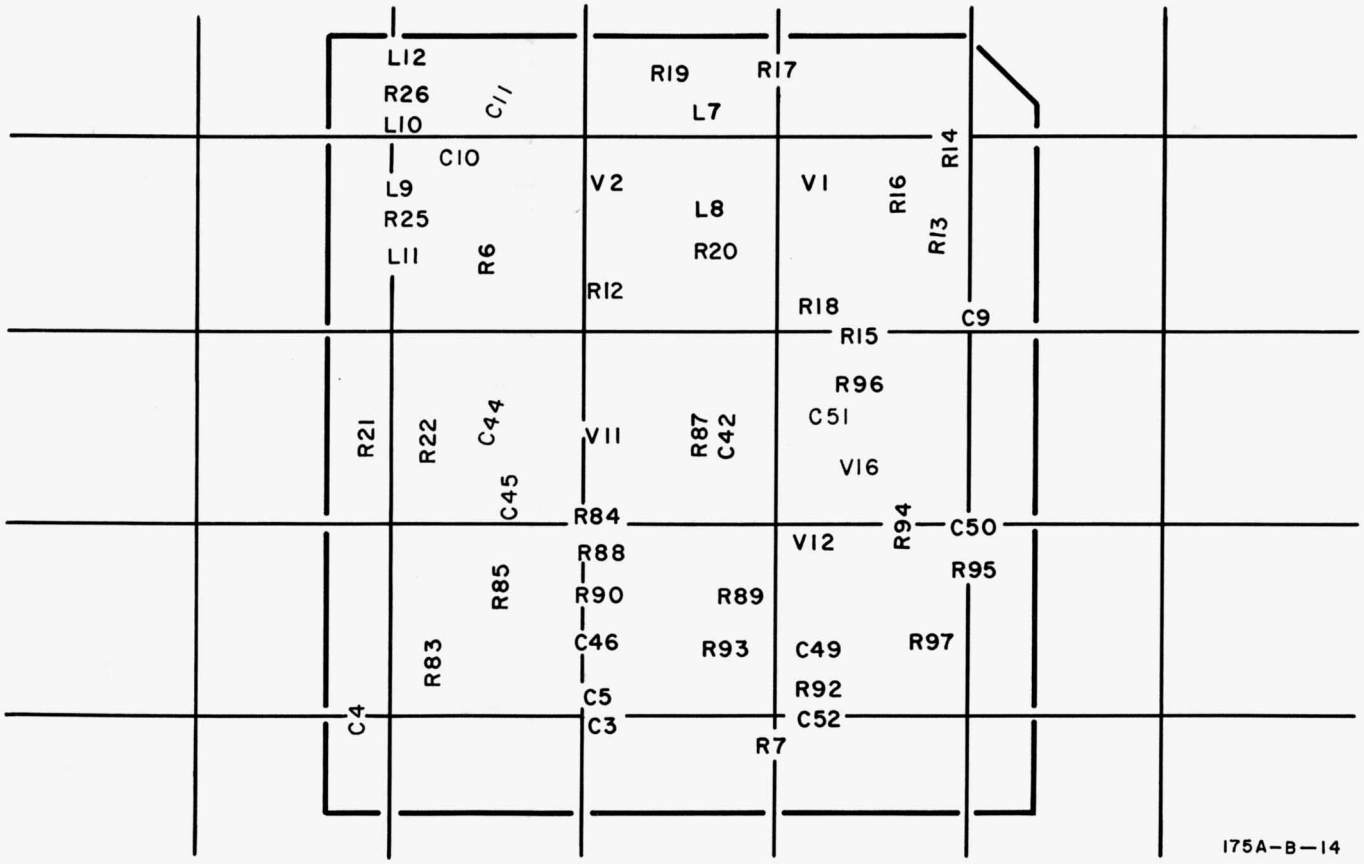
L12
R26
L10
C11
R19
R17
L7
C10
L9
R25
L11
R6
V2
L8
R20
R12
V1
R16
R13
R14
R18
R15
C9
R96
C51
V16
R21
R22
C44
C45
V11
R87
C42
R84
R88
R90
R85
R83
C46
C5
C3
C4
R7
V12
R94
C50
R95
R89
R93
C49
R92
C52
R97
175A-B-14

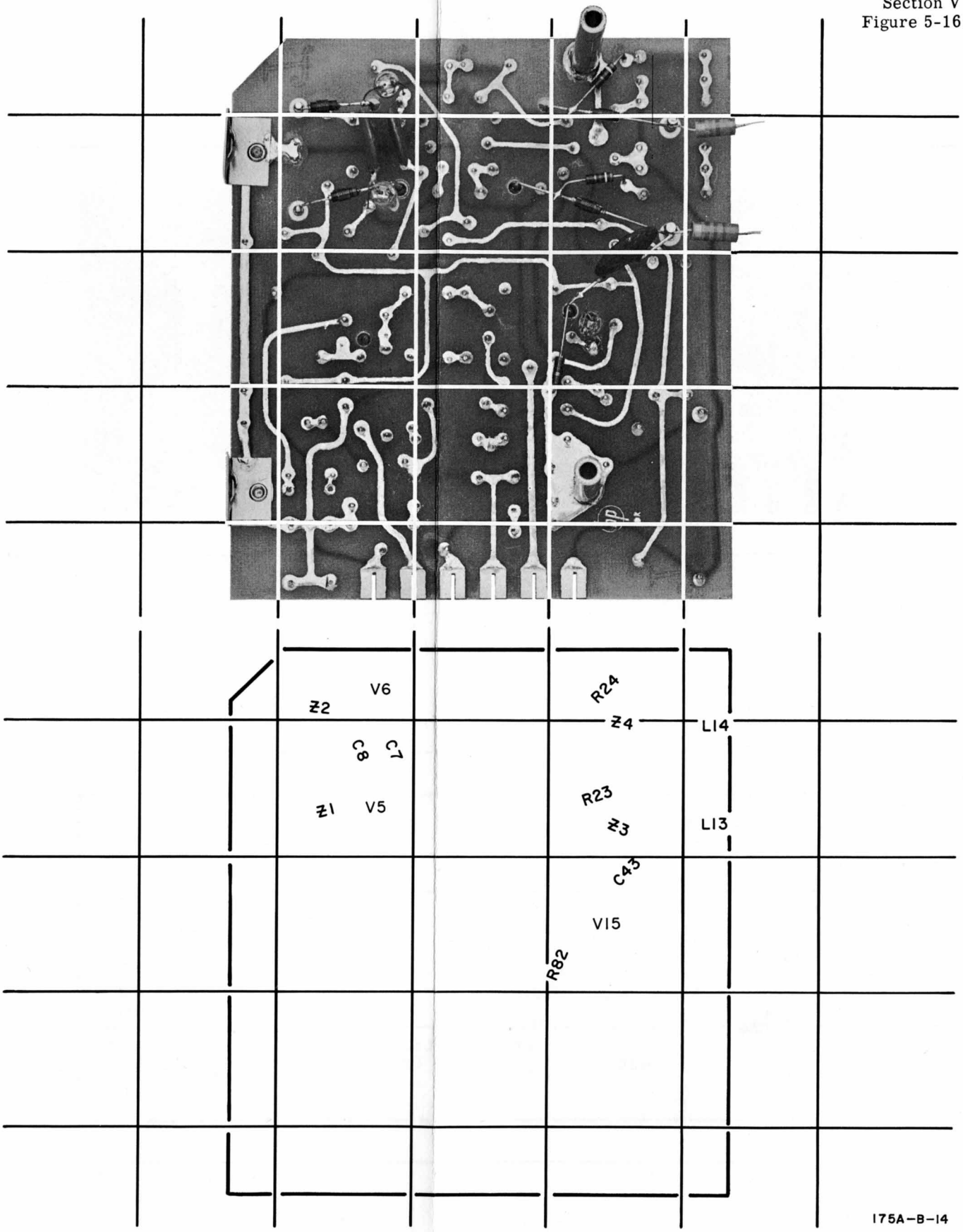

Figure 5-16. A1 Vertical-Input Assembly
Component Locations
(Left: Top, Right: Bottom)

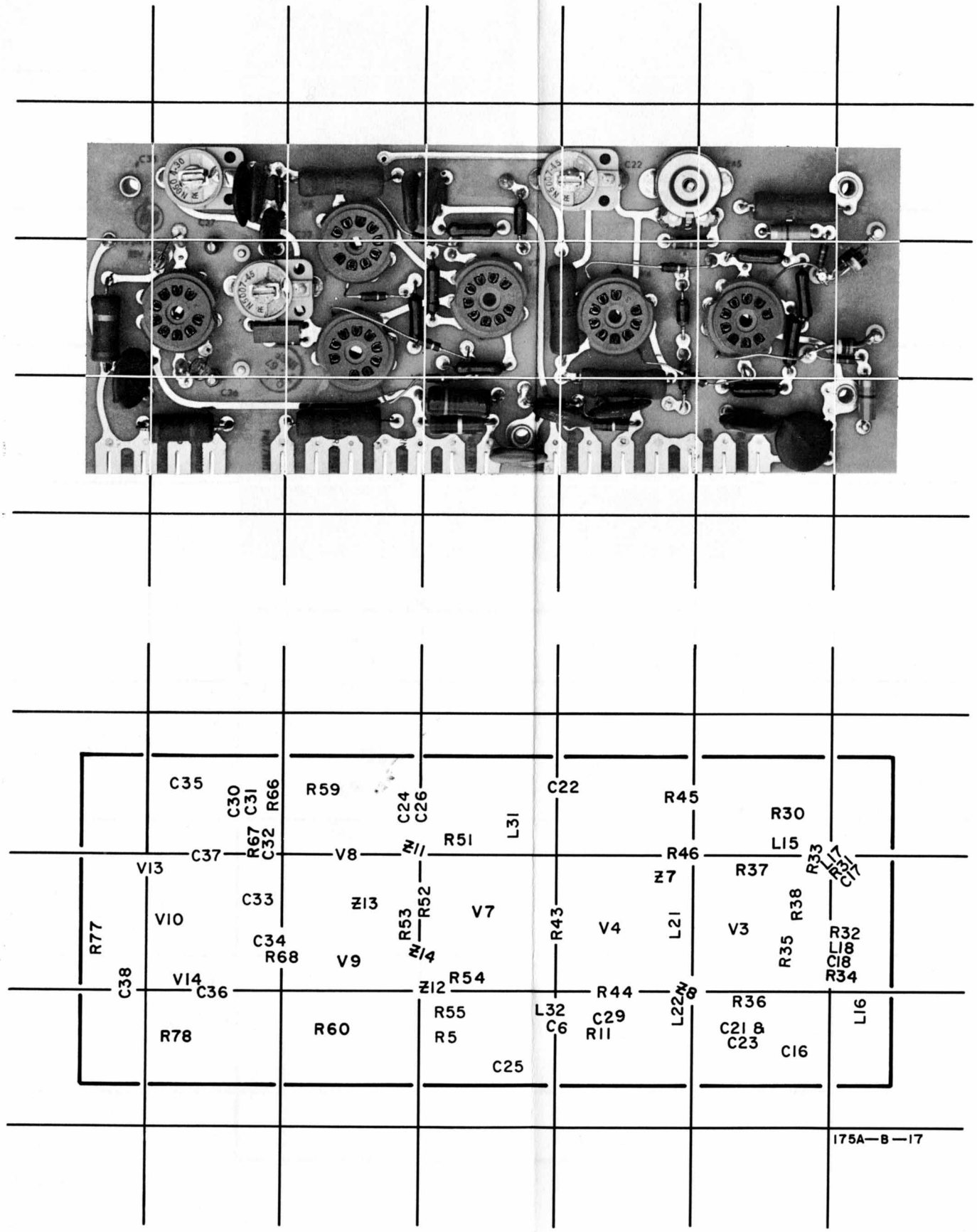
C35
C30
C31
R66
R59
C24
C26
C22
R45
R30
R67
C32
C37
V8
Z11
R51
L31
R46
L15
R33
L17
R31
C17
V13
Z7
R37
C33
Z13
R52
R38
V10
R53
V7
R43
V4
L21
V3
R77
C34
R68
V9
Z14
R35
R32
L18
C18
R34
C38
V14
C36
Z12
R54
R44
Z8
R36
R55
L32
C29
L22
L16
R78
R60
R5
C6
R11
C21 &
C23
C16
C25
175A—B—17

Figure 5-17.

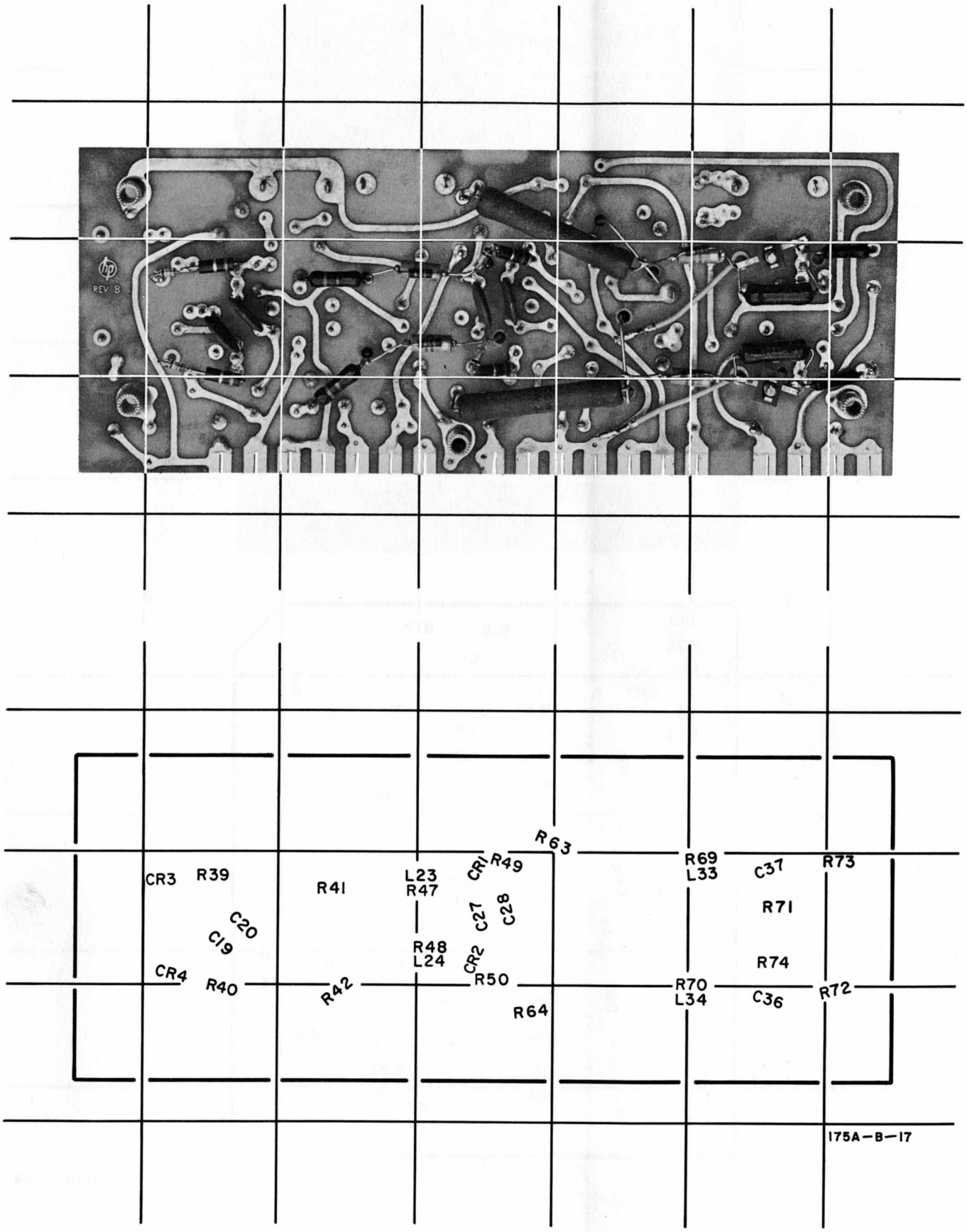

A2 Vertical-Output Assembly Component Locations
(Left: Top, Right: Bottom)

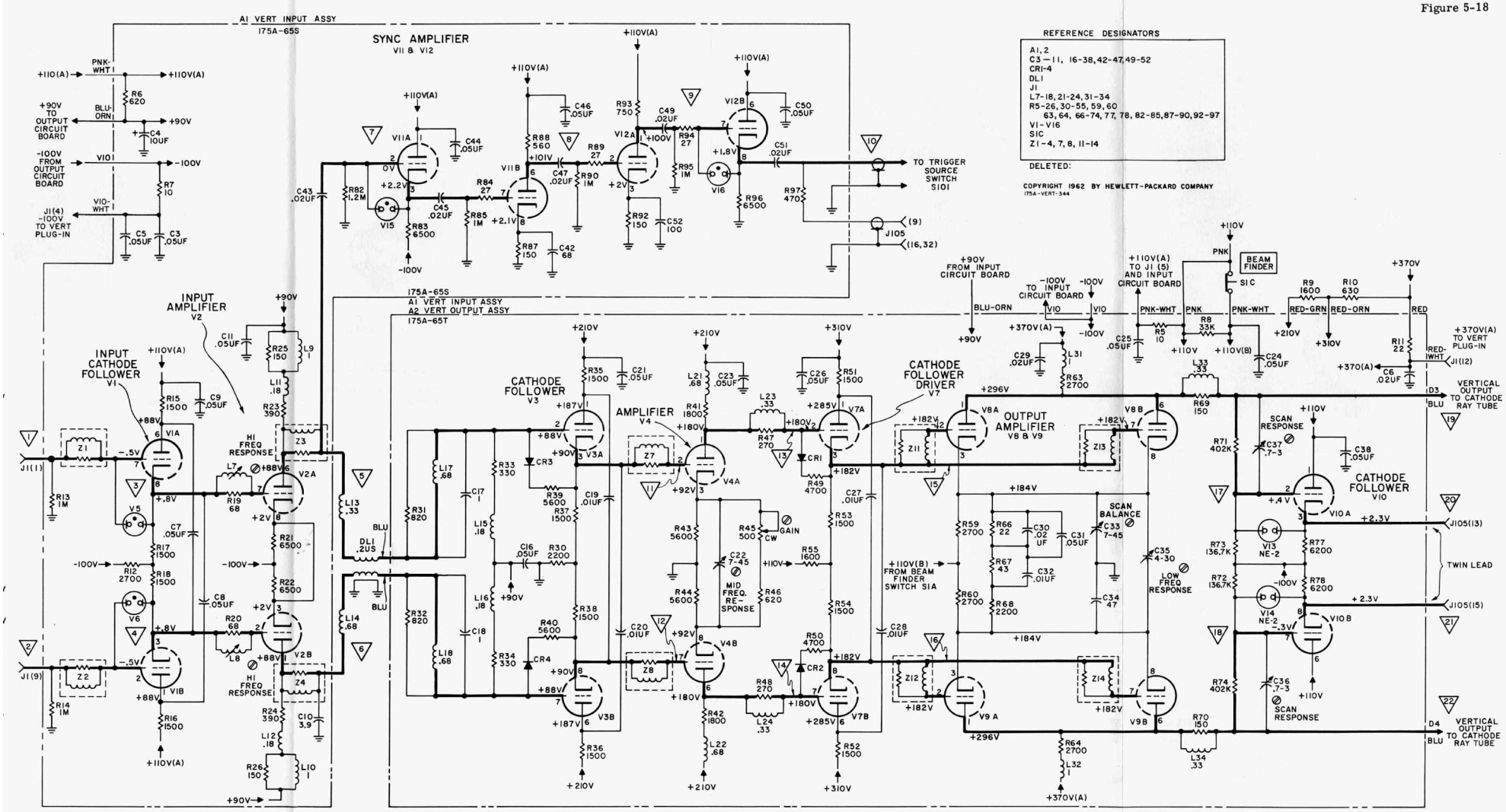

REFERENCE DESIGNATORS

A1, 2
C3–11, 16-38, 42-47, 49-52
CR1-4
DL1
J1
L7-18, 21-24, 31-34
R5-26, 30-55, 59, 60
63, 64, 66-74, 77, 78, 82-85, 87-90, 92-97
V1-V16
S1C
Z1-4, 7, 8, 11-14

DELETED:

COPYRIGHT 1962 BY HEWLETT-PACKARD COMPANY
175A-VERT-344

Figure 5-18. Vertical Amplifier

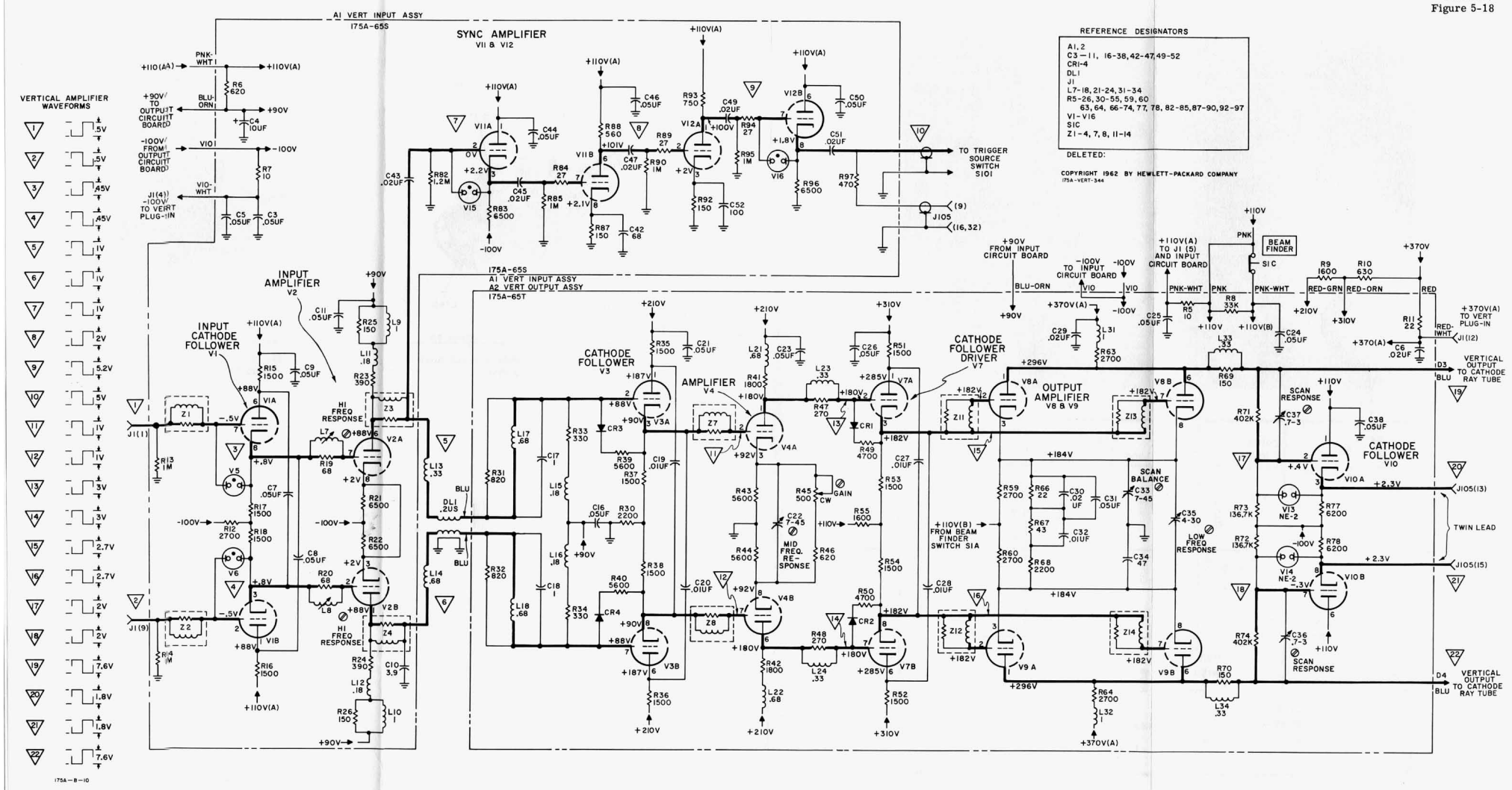

Figure 5-18. Vertical Amplifier

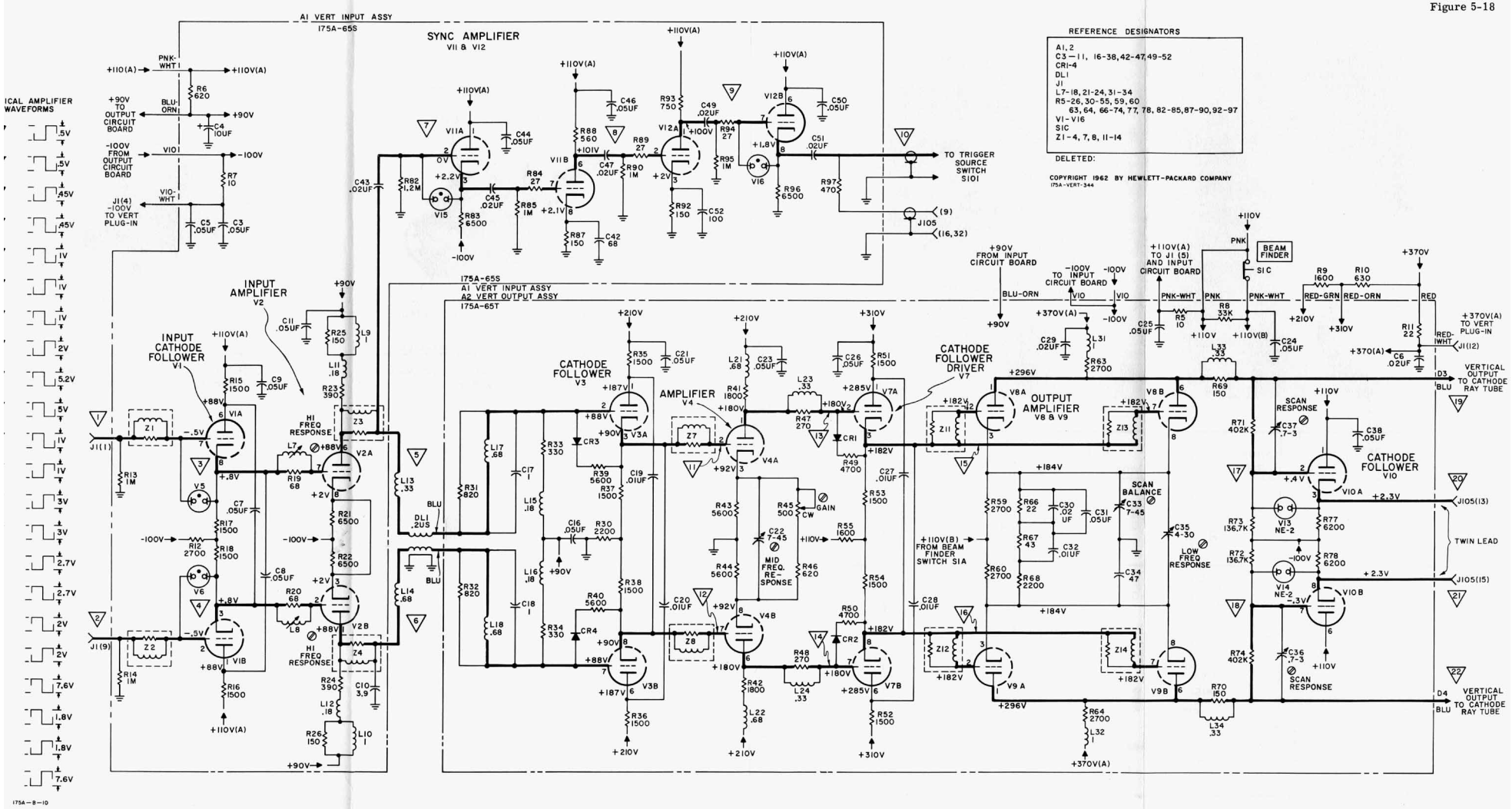

REFERENCE DESIGNATORS

A1, 2
C3—11, 16-38, 42-47, 49-52
CR1-4
DL1
J1
L7-18, 21-24, 31-34
R5-26, 30-55, 59, 60
63, 64, 66-74, 77, 78, 82-85, 87-90, 92-97
V1-V16
S1C
Z1-4, 7, 8, 11-14

DELETED:

COPYRIGHT 1962 BY HEWLETT-PACKARD COMPANY
175A-VERT-344

Figure 5-18. Vertical Amplifier

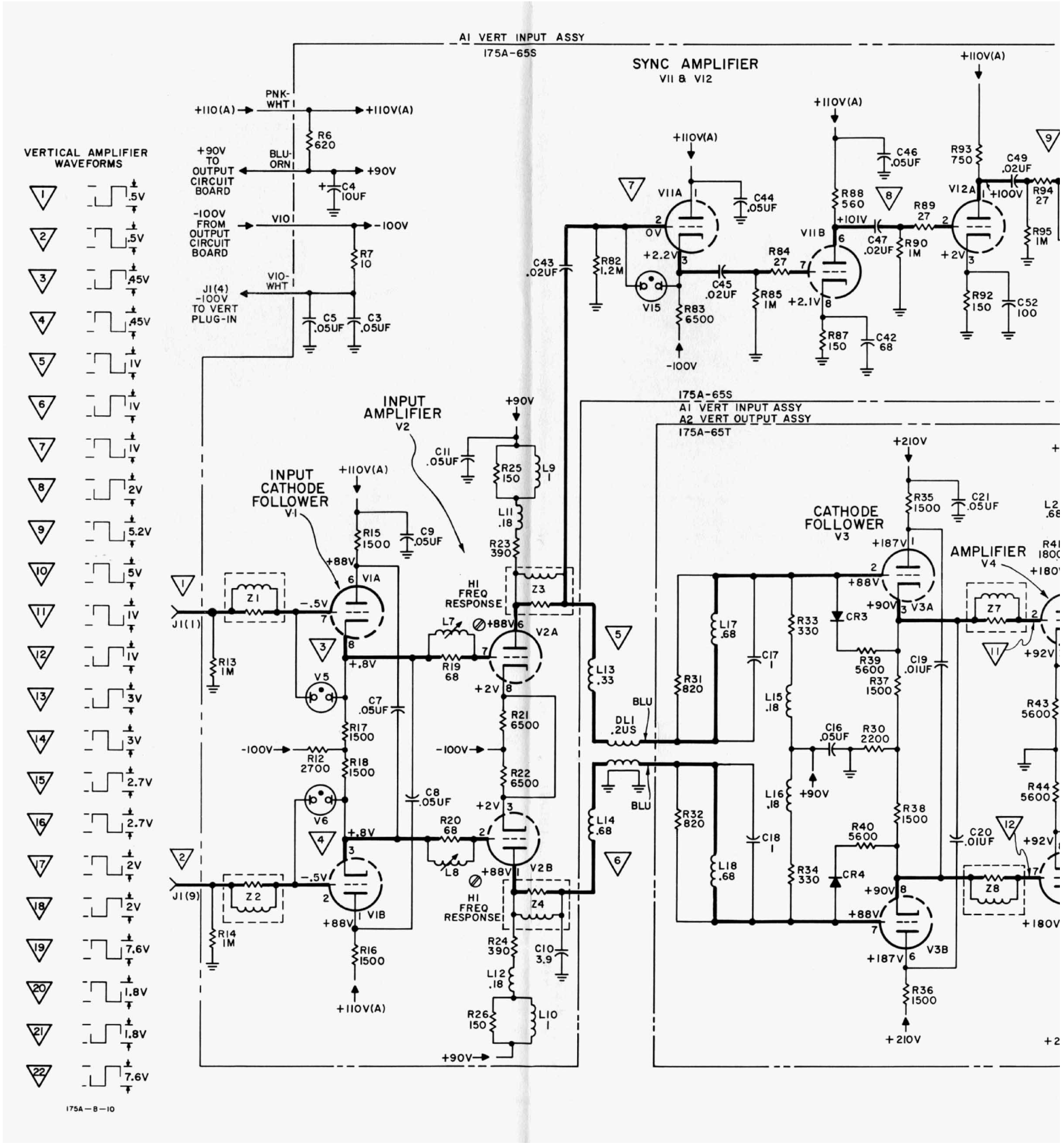
VERTICAL AMPLIFIER WAVEFORMS
A1 VERT INPUT ASSY
175A-65S
SYNC AMPLIFIER
V11 & V12
INPUT AMPLIFIER
V2
INPUT CATHODE FOLLOWER
V1
CATHODE FOLLOWER
V3
AMPLIFIER
V4
A2 VERT OUTPUT ASSY
175A-65T
+110(A)
PNK-WHT
BLU-ORN
+90V TO OUTPUT CIRCUIT BOARD
-100V FROM OUTPUT CIRCUIT BOARD
V10-WHT
J1(4) -100V TO VERT PLUG-IN
J1(1)
J1(9)
HI FREQ RESPONSE
BLU
175A—8—10

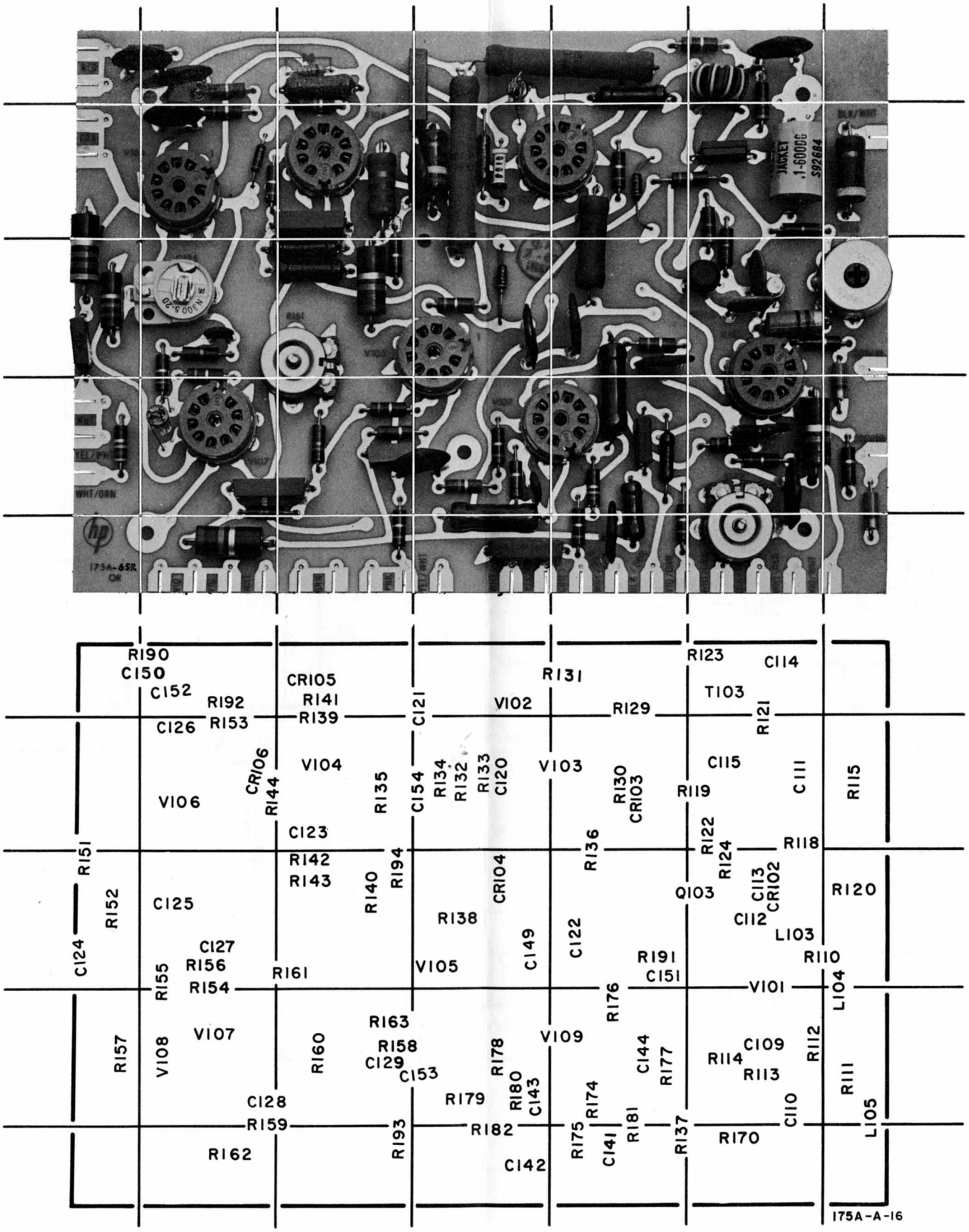

Figure 5-19. A101 Sweep-Generator Assembly Component Locations

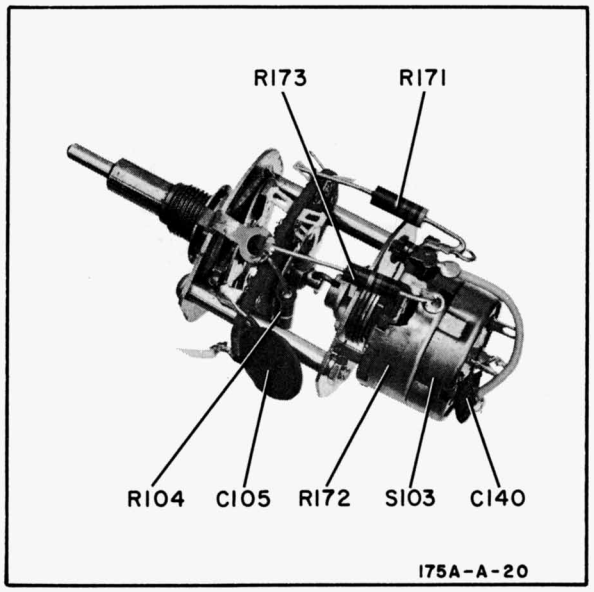

Figure 5-20. A102 Trigger-Source Switch Assembly, Mounted Components

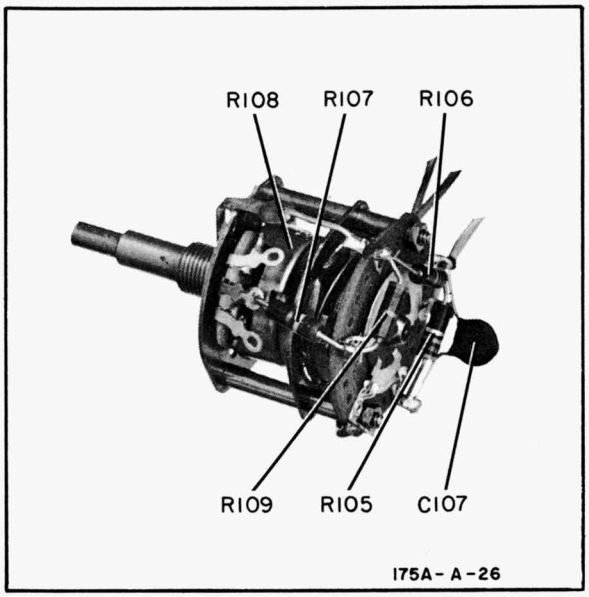

Figure 5-21. A103 Trigger-Level and -Slope Switch Assembly, Mounted Components

SCHEMATIC DIAGRAM NOTES

VERTICAL AMPLIFIER

1. Resistance in ohms, capacitance in picofarads, inductance in microhenries unless otherwise indicated.

2. All triodes type 6DJ8.

3. Signal lines weighted.

4. Conditions of dc voltage measurement:

   a. Disconnect all signal inputs.

   b. Set SWEEP MODE to FREE RUN.

   c. Center trace with VERTICAL POSITION.

5. Conditions of waveform measurement:

   a. Connect 10 VOLTS CALIBRATOR to vertical INPUT.

   b. Set:

   VERTICAL SENSITIVITY . . . . . 2 VOLTS/CM
   TRIGGER SOURCE. . . . . INT.
   VERTICAL POSITION . . . . . to center trace

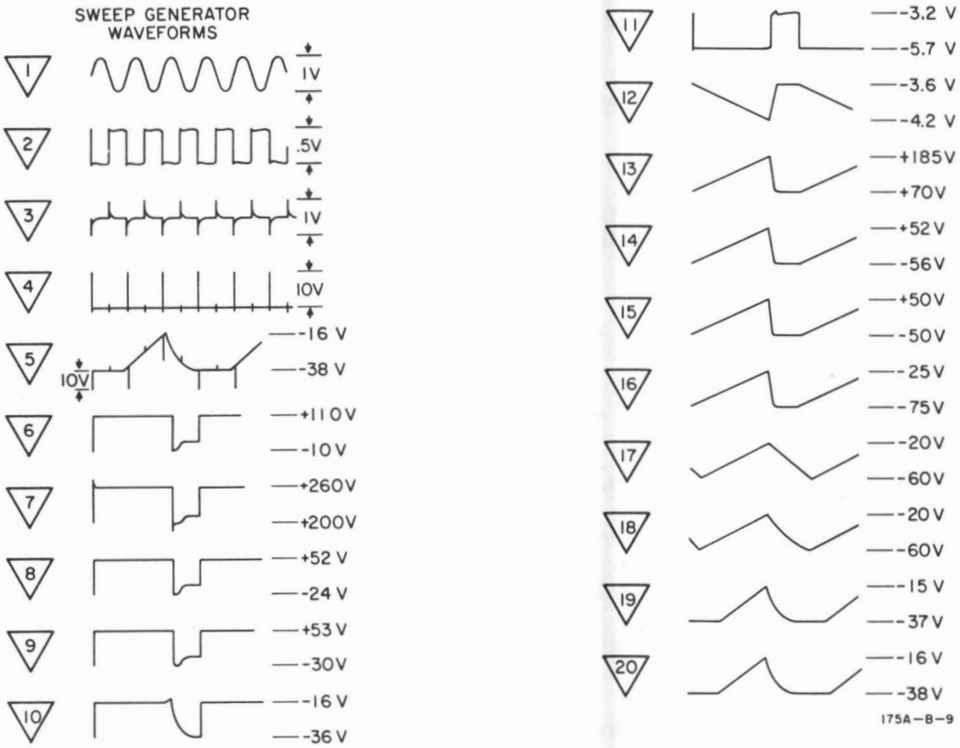

SCHEMATIC DIAGRAM NOTES

SWEEP GENERATOR

1. Resistance in ohms, capacitance in picofarads, inductance in microhenries unless otherwise indicated.
2. All triodes type 6DJ8.
3. Signal lines weighted. Feedback lines weighted with dashes.
4. Conditions of dc voltage measurement:
   a. Disconnect all signal inputs.
   b. Set:

SWEEP MODE	PRESET
TRIGGER SLOPE	+
TRIGGER LEVEL	0
HORIZONTAL DISPLAY	X1

5. Conditions of waveform measurement:
   a. Connect a 2-kc 1-volt p-p sine wave from an audio oscillator to TRIG INPUT.
   b. Set

SWEEP MODE	PRESET
TRIGGER SLOPE	+
TRIGGER SOURCE	EXT AC
TRIGGER LEVEL	0
SWEEP TIME	0.1 MSEC/CM
SWEEP OCCURRENCE	NORMAL
HORIZONTAL POSITION	to center trace

COPYRIGHT 1962 BY HEWLETT-PACKARD COMPANY

This drawing is intended for the operation and maintenance of Hewlett-Packard equipment and is not to be used otherwise or reproduced without written consent of the Hewlett-Packard Company.

175A-SG-344

NOTE
ALL TRIODES TYPE 6DJ8

REFERENCE DESIGNATORS

A101
C105, 107, 109-115, 120-129, 140-144, 149-154
CR102-106
J101, 105
L103-105
Q103
R104-116, R118-124, 129-144, 151-163, 170-182, 190-194
S101-103
T103
V101-110

DELETED:

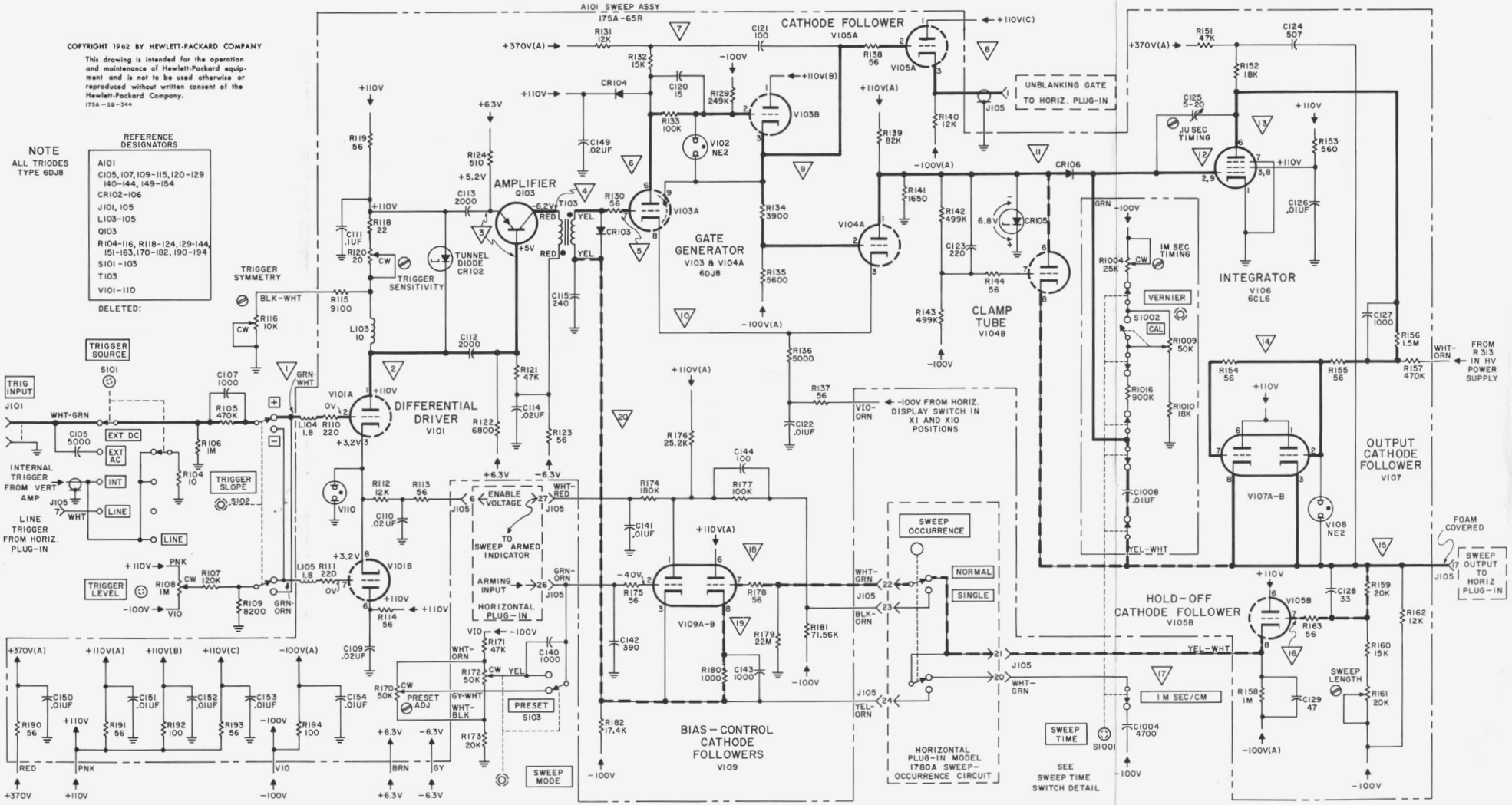

Figure 5-22. Sweep Generator

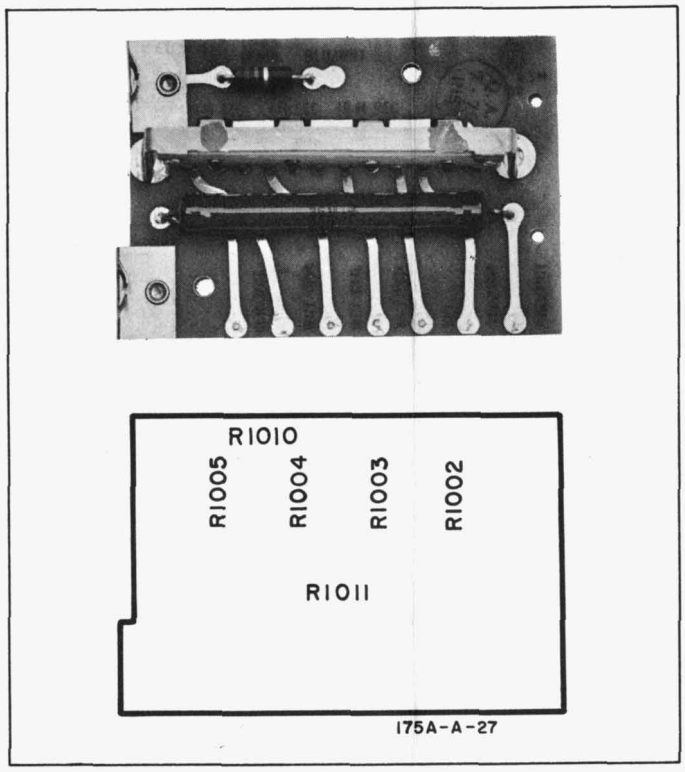

Figure 5-23. A1001 Sweep-Switch Circuit Board Component Locations

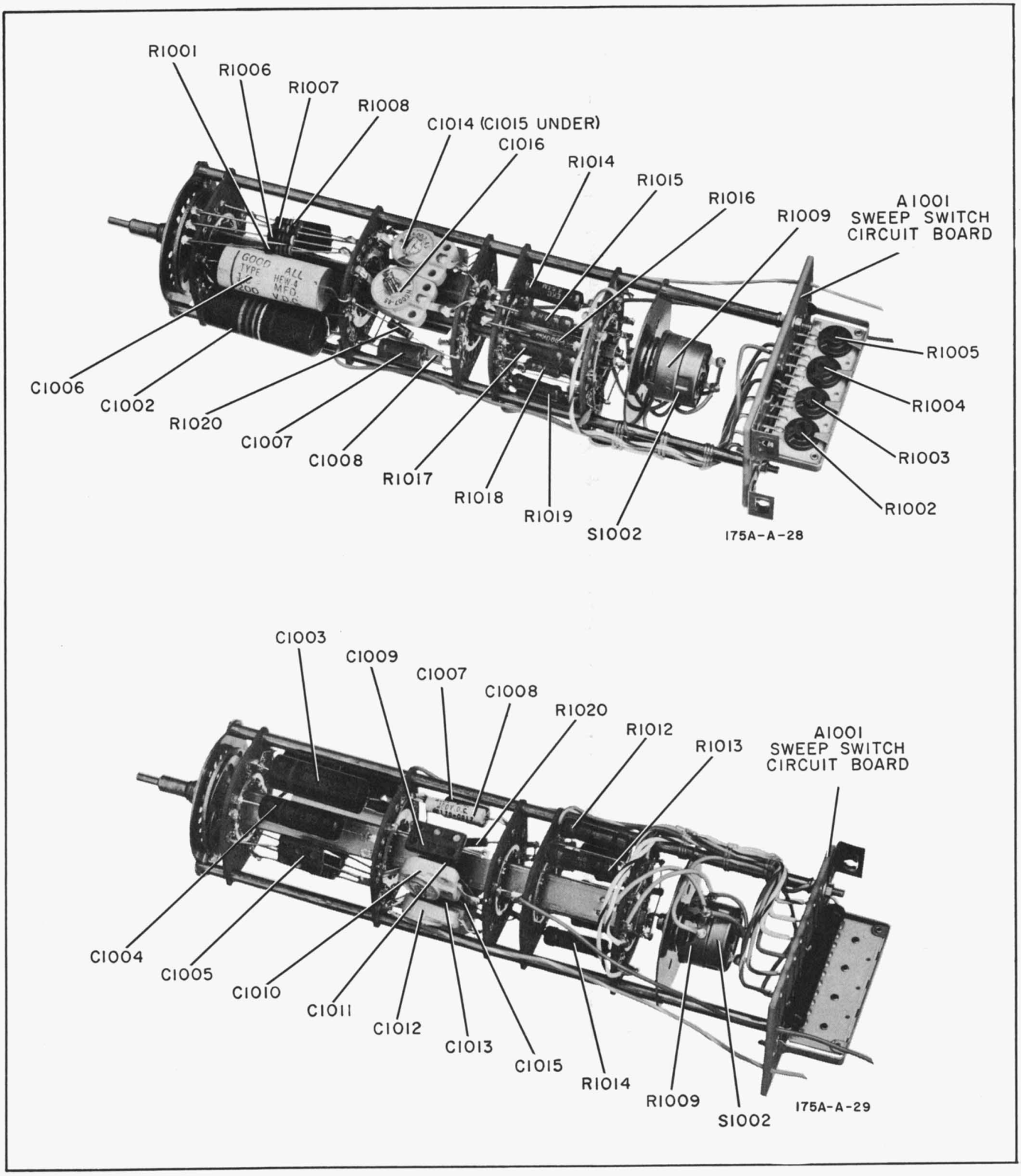

Figure 5-24. A1002 Sweep-Time Switch Assembly, Mounted Components

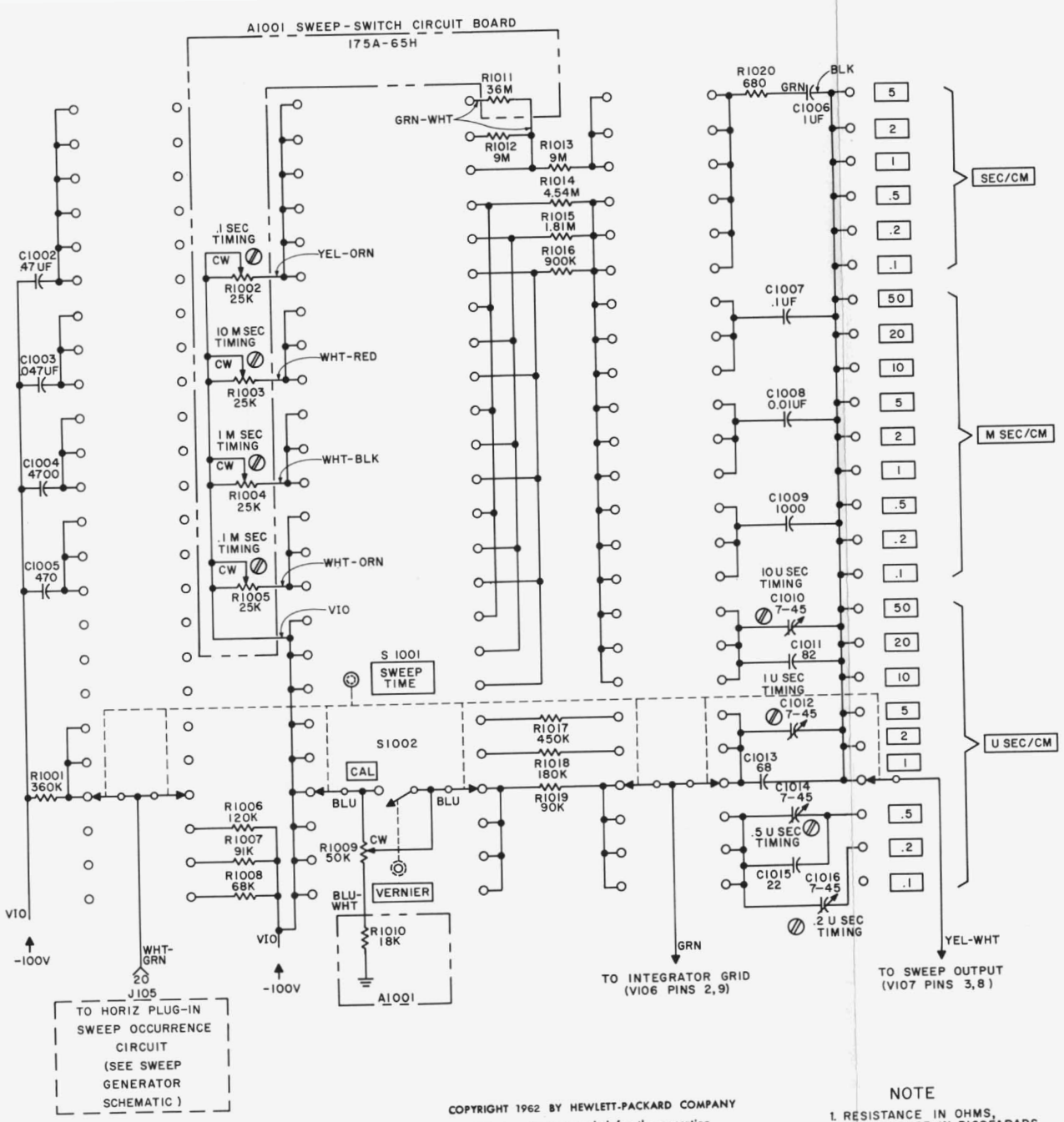

REFERENCE DESIGNATORS

A1001
C1002 - 1016
R1001 - 1020
S1001 - 1002

COPYRIGHT 1962 BY HEWLETT-PACKARD COMPANY

This drawing is intended for the operation and maintenance of Hewlett-Packard equipment and is not to be used otherwise or reproduced without written consent of the Hewlett-Packard Company.

175A-STS-344

NOTE

1. RESISTANCE IN OHMS, CAPACITANCE IN PICOFARADS, UNLESS OTHERWISE NOTED

Figure 5-25. Sweep-Time Switch

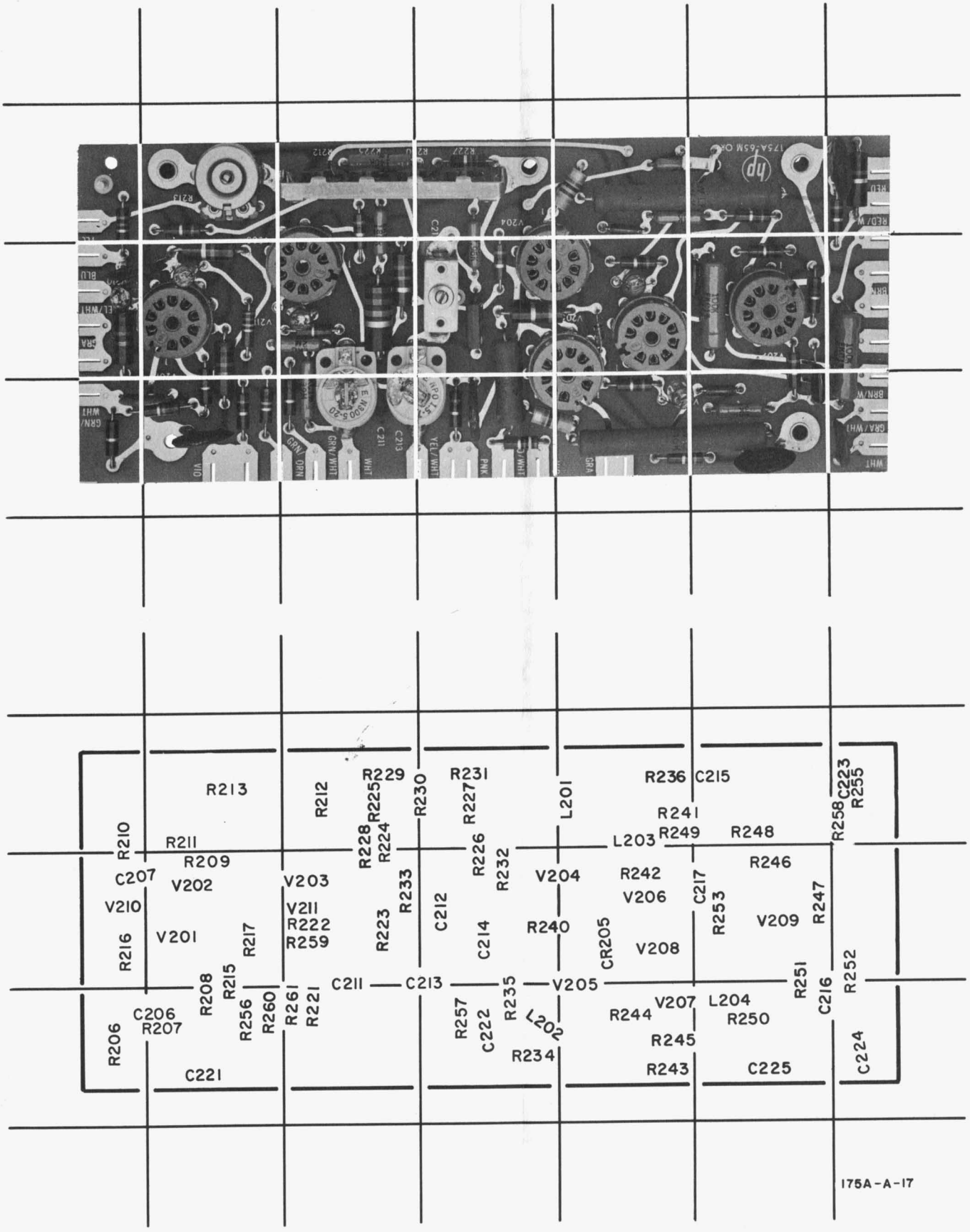

Figure 5-26. A201 Horizontal Amplifier Assembly Component Locations

SCHEMATIC DIAGRAM NOTES

HORIZONTAL AMPLIFIER

1. Resistance in ohms, capacitance in picofarads, inductance in microhenries unless otherwise indicated.

2. Signal lines weighted. Feedback lines weighted with dashes.

3. Conditions of sweep-voltage waveform measurements:

   a. Waveforms are shown for X1 and X10 setting of HORIZONTAL DISPLAY.

   b. Set:

   VERTICAL SENSITIVITY . . . . . 2 VOLTS/CM
   SWEEP TIME . . . . . 1 MSEC/CM
   TRIGGER SOURCE . . . . . INT.
   TRIGGER SLOPE . . . . . +
   TRIGGER LEVEL 0
   SWEEP MODE . . . . . PRESET
   HORIZONTAL POSITION . . . . . to center trace

4. Conditions of HORIZ. INPUT waveform measurements:

   a. Connect 10 VOLTS CALIBRATOR to HORIZ. INPUT.

   b. Set:

   HORIZONTAL DISPLAY. . . . 1 VOLT/CM AC
   EXTERNAL VERNIER. . . . . CAL.
   HORIZONTAL POSITION . . . . to center trace

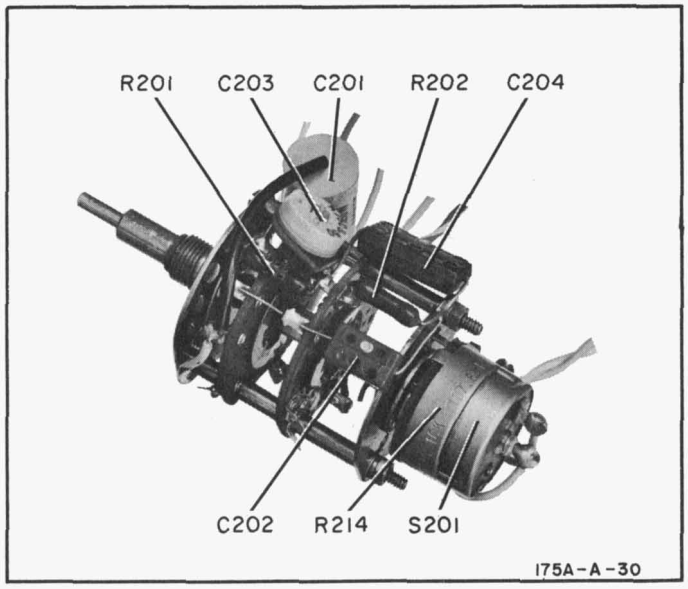

Figure 5-27. A202 Horizontal Display Switch Assembly, Mounted Components

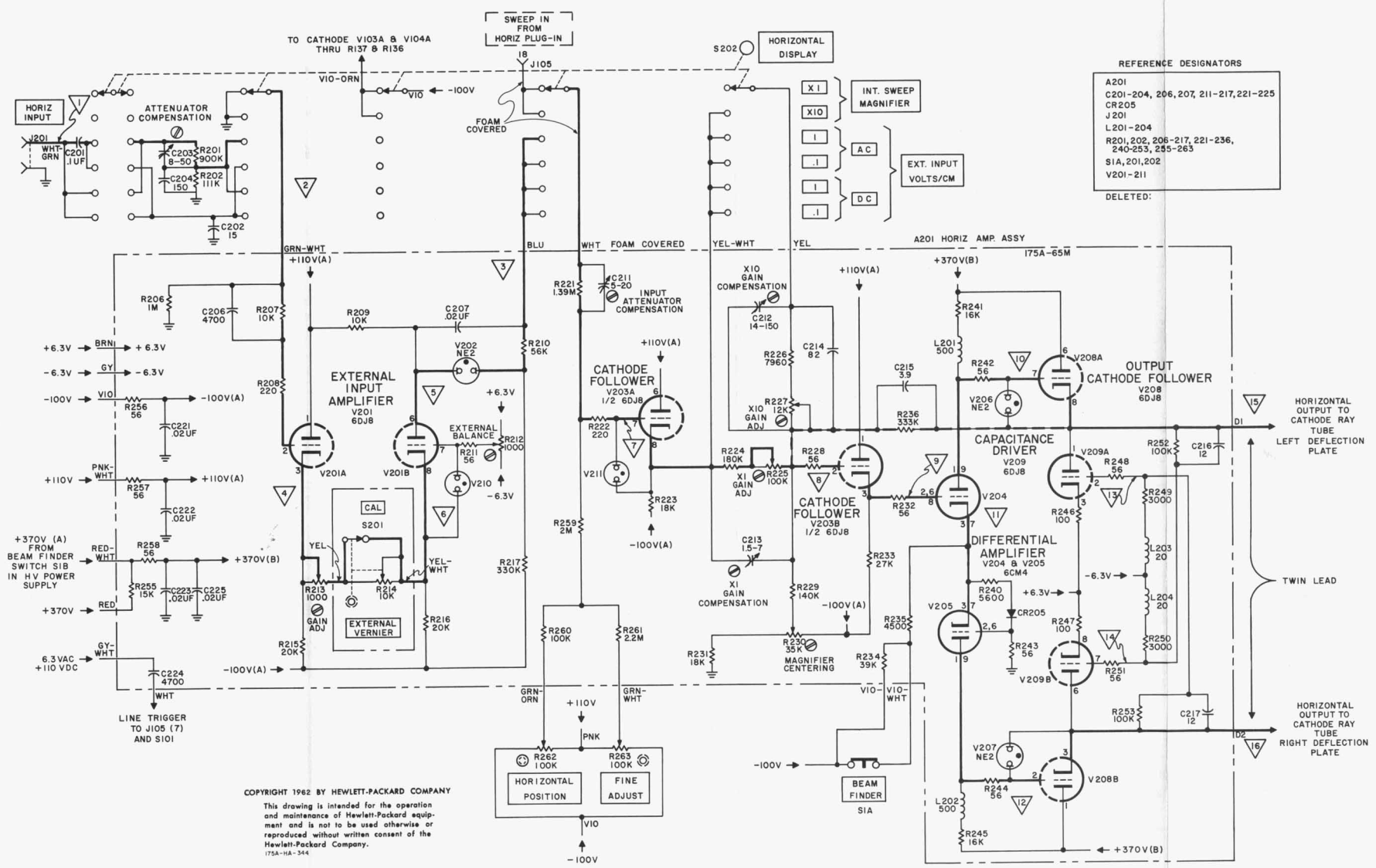

COPYRIGHT 1962 BY HEWLETT-PACKARD COMPANY

This drawing is intended for the operation and maintenance of Hewlett-Packard equipment and is not to be used otherwise or reproduced without written consent of the Hewlett-Packard Company.

175A-HA-344

Figure 5-28. Horizontal Amplifier

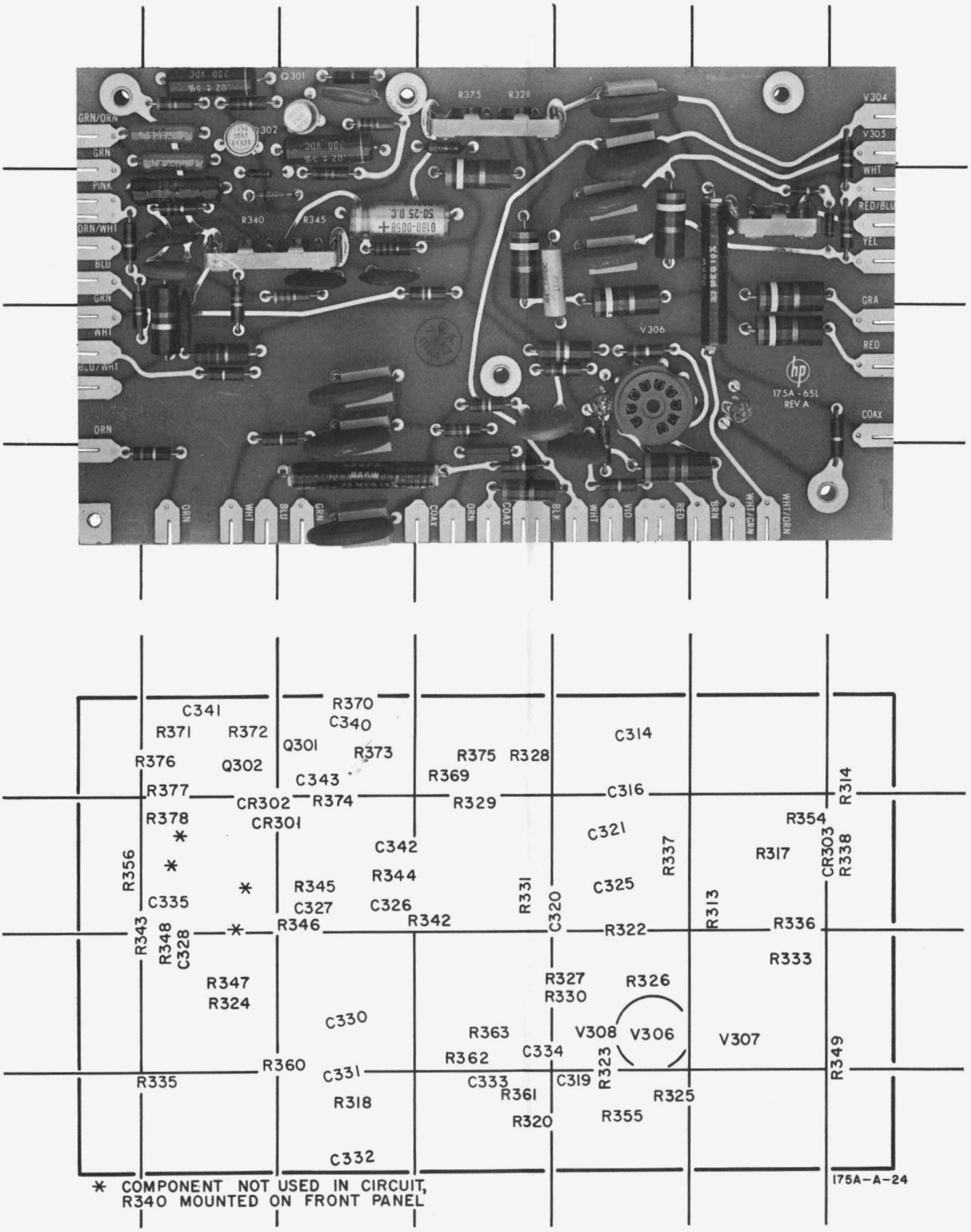

Figure 5-29. A301 High-Voltage and Calibrator Assembly Component Locations

SCHEMATIC DIAGRAM NOTES

HIGH-VOLTAGE POWER SUPPLY

1. Resistance in ohms, capacitance in picofarads, inductance in microhenries unless otherwise indicated.

2. DC voltage and calibrator output lines are weighted. Feedback lines are weighted with dashes.

3. Conditions of dc voltage and waveform measurements:

   a. Connect 10 VOLTS CALIBRATOR to vertical INPUT.

   b. Set:

   VERTICAL SENSITIVITY . . . . . 2 VOLTS/CM
   SWEEP MODE. . . . . PRESET
   TRIGGER SOURCE . . . . . INT.
   TRIGGER SLOPE . . . . . +
   TRIGGER LEVEL 0
   HORIZONTAL POSITION . . . . . to center trace
   VERTICAL POSITION . . . . . to center trace

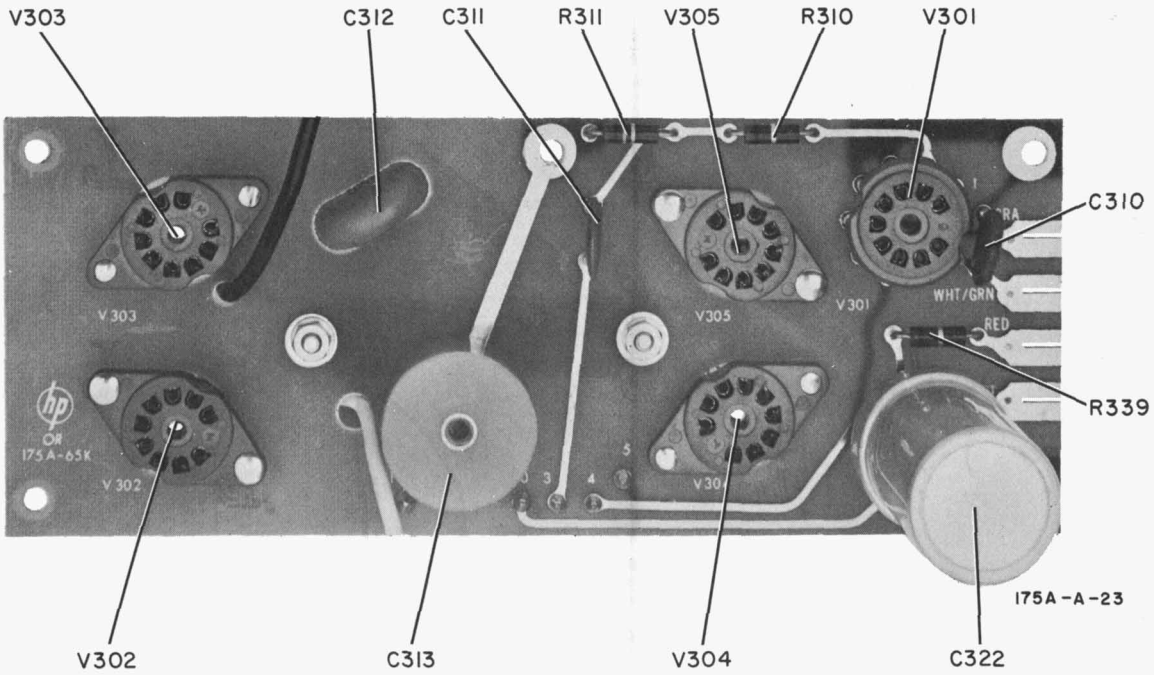

Figure 5-30. A302 High-Voltage Deck Assembly Component Locations

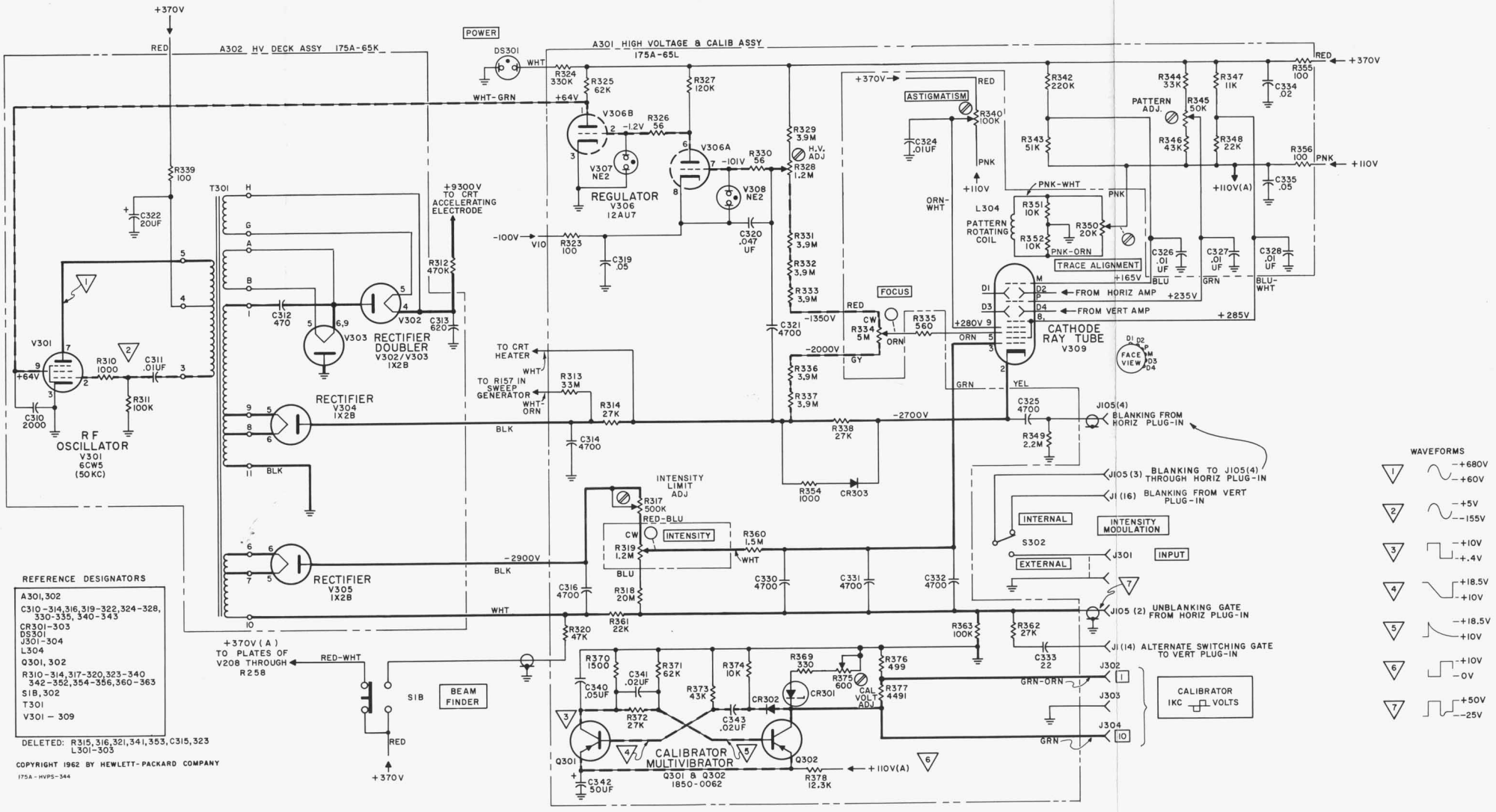

Figure 5-31. High-Voltage Power Supply and Calibrator

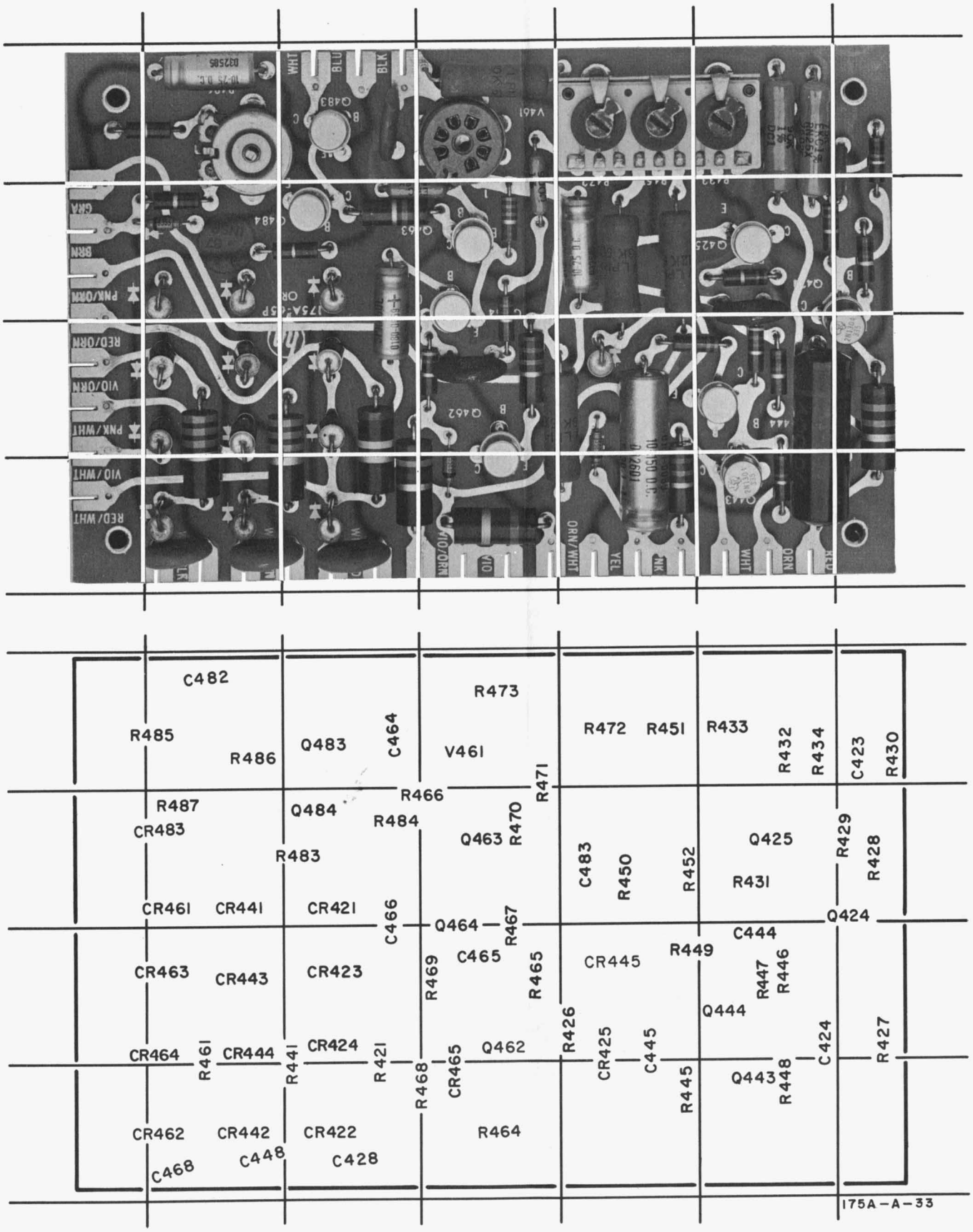

Figure 5-32. A401 Low-Voltage Power Supply Component Locations

SCHEMATIC DIAGRAM NOTES

LOW-VOLTAGE POWER SUPPLY

1. Resistance in ohms, capacitance in picofarads unless otherwise noted.

2. DC voltage lines are weighted. Feedback lines are weighted with dashes.

3. AC voltage values are rms.

4. Conditions of dc voltage and waveform measurement:

   a. Line voltage 115 volts ac.

   b. Set HORIZONTAL DISPLAY to 1 VOLT/CM AC.

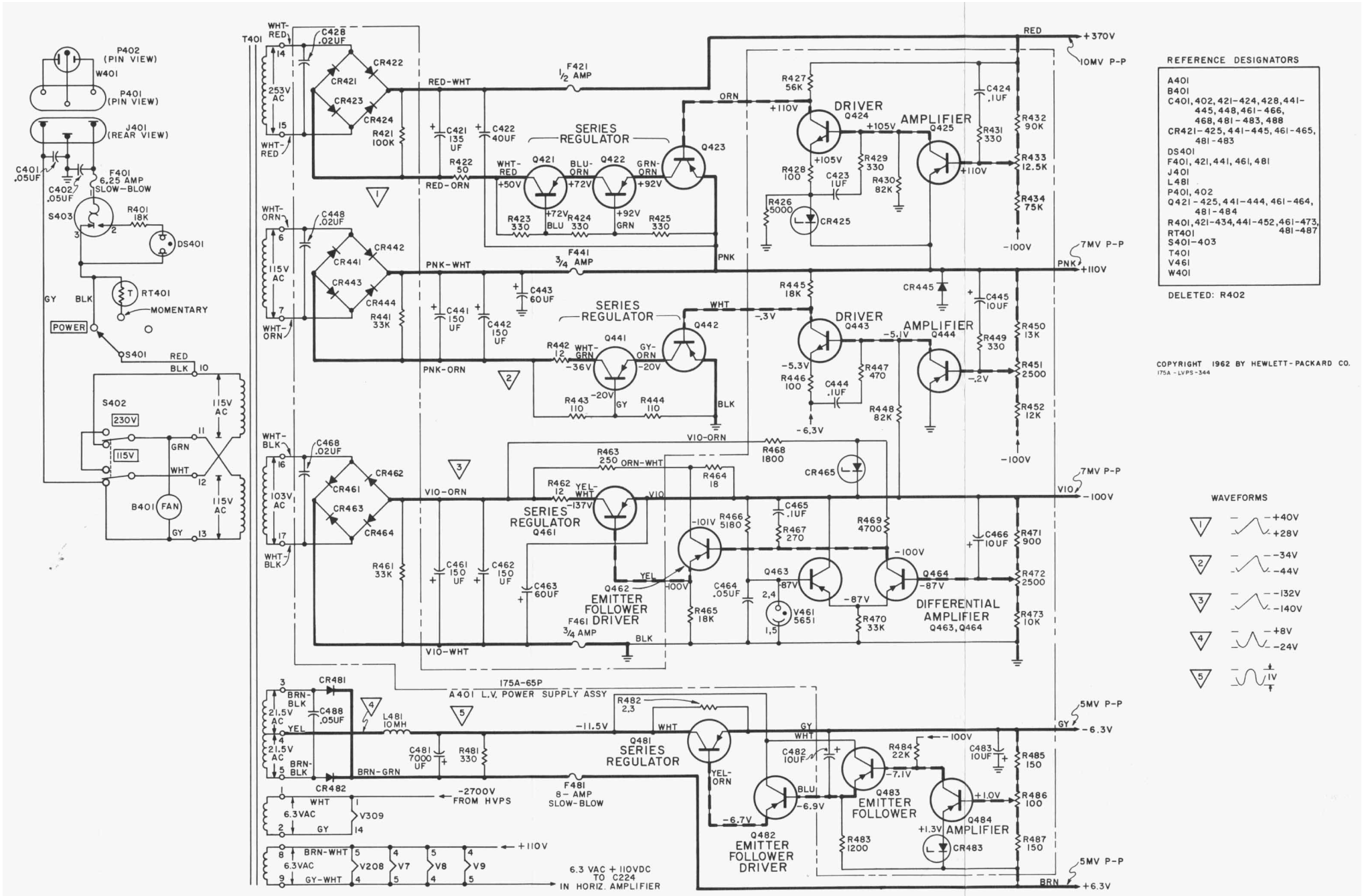

Figure 5-33. Low-Voltage Power Supply

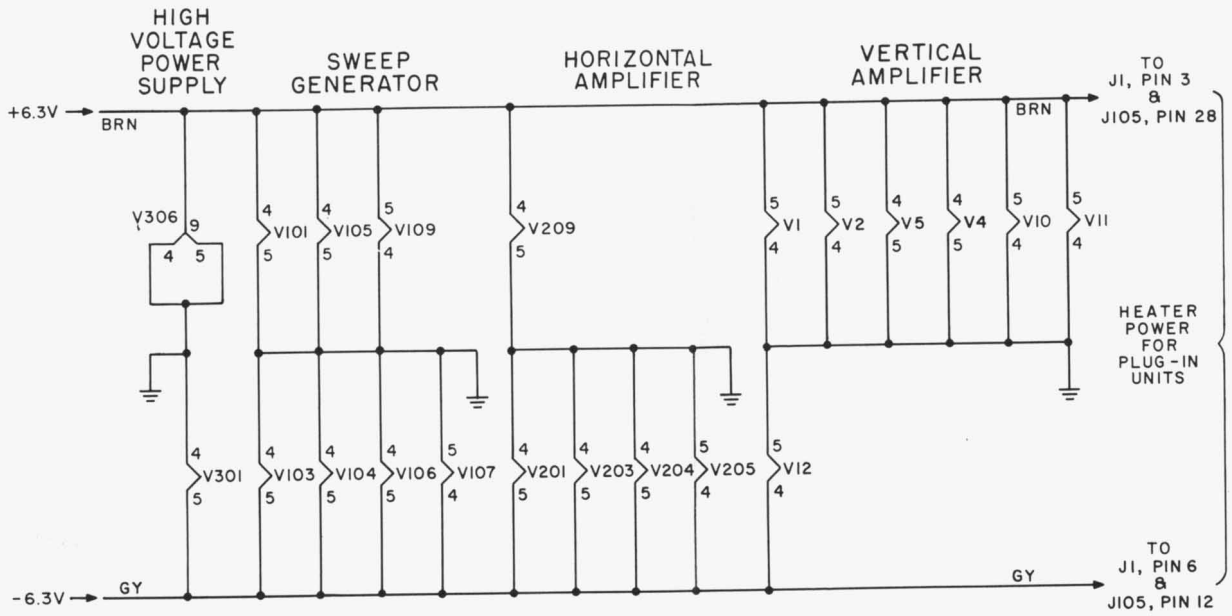

COPYRIGHT 1962 BY HEWLETT-PACKARD COMPANY

This drawing is intended for the operation and maintenance of Hewlett-Packard equipment and is not to be used otherwise or reproduced without written consent of the Hewlett-Packard Company.

175A HTR CKT- 344

Figure 5-34. Heater Circuit

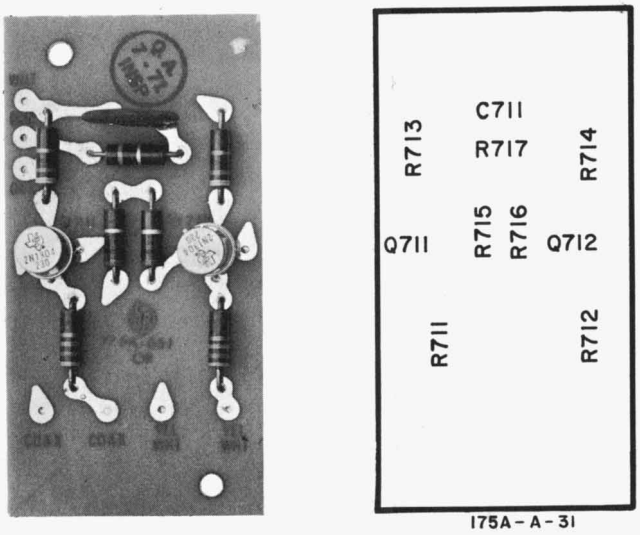

Figure 5-35. A701 Gate- and Sweep-Output Assembly Component Locations

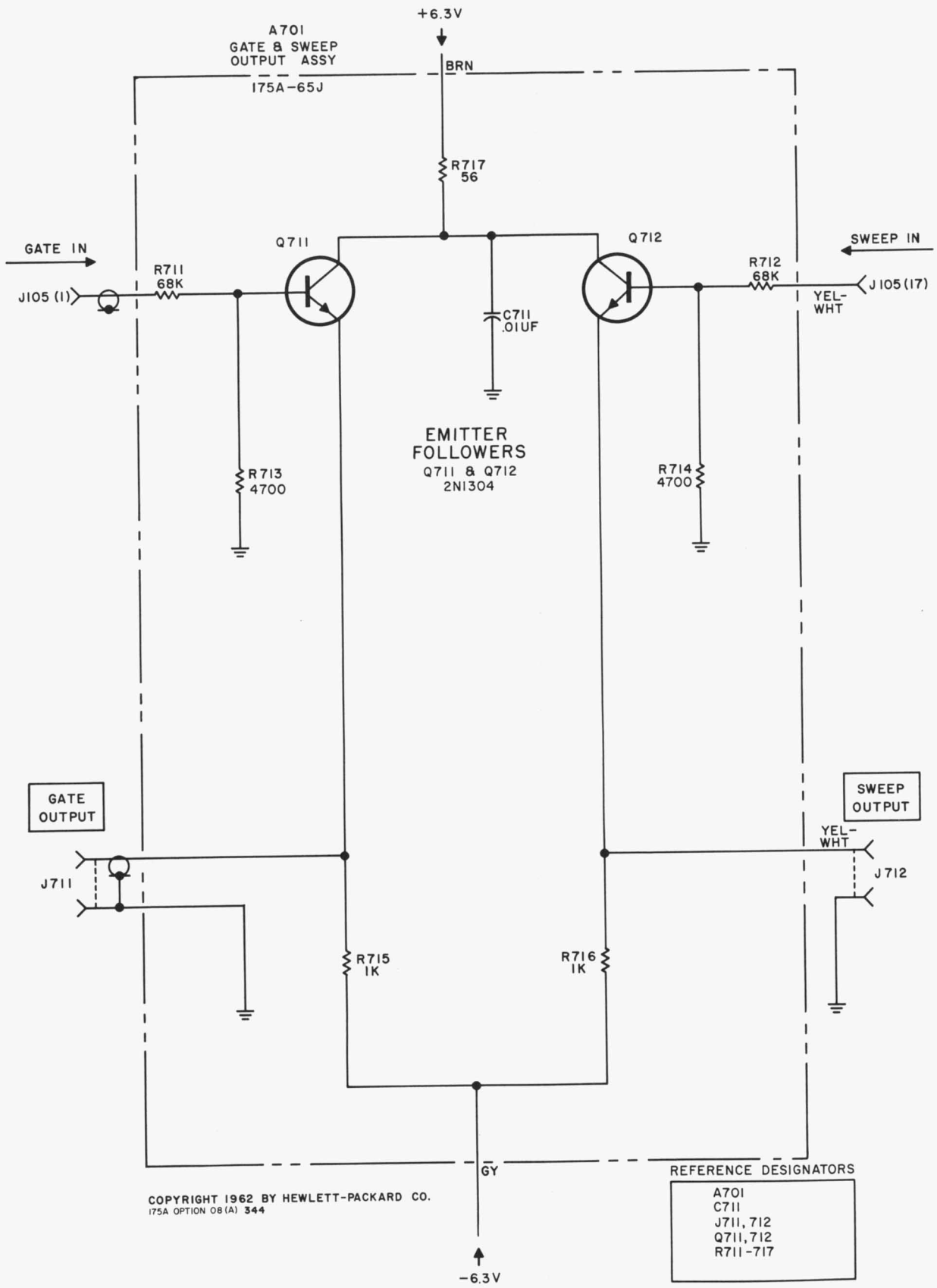

Figure 5-36. Gate and Sweep Output

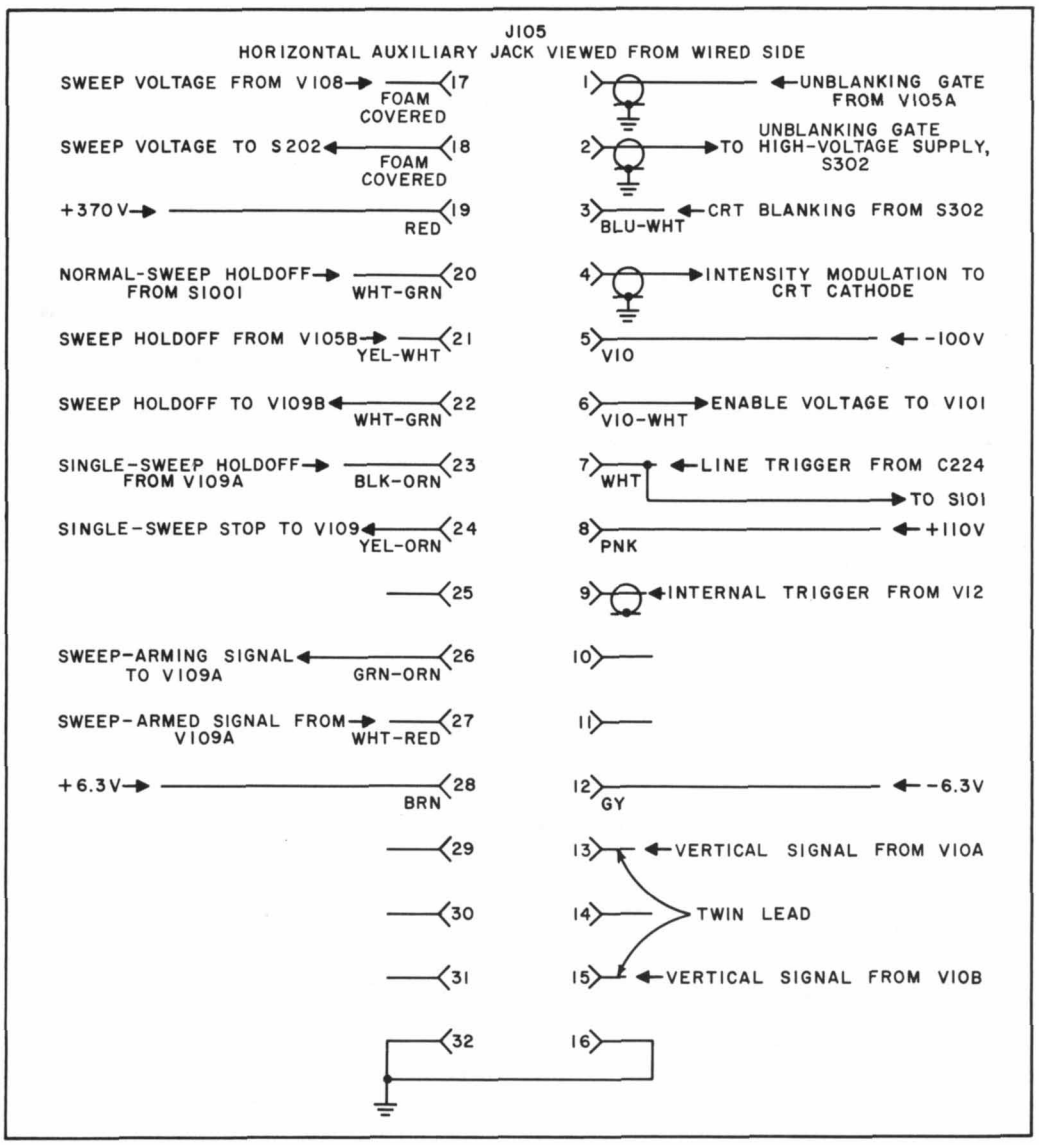

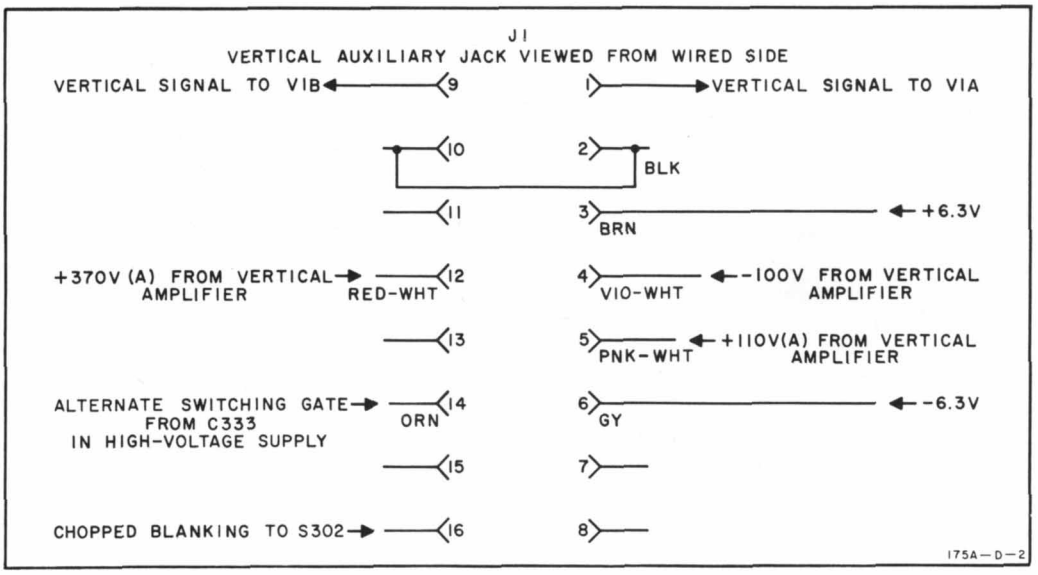

Figure 5-37. Connectors

SECTION VI
REPLACEABLE PARTS

6-1. INTRODUCTION.

6-2. This section contains information for ordering replacement parts. Table 6-1 lists parts in alpha-numerical order of their reference designators and indicates the description and hp stock number of each part, together with any applicable notes. Table 6-2 lists parts in alpha-numerical order of their hp stock numbers and provides the following information on each part:

a. Description of the part (see list of abbreviations below).

b. Typical manufacturer of the part in a five-digit code; see list of manufacturers in appendix.

c. Manufacturer's stock number.

d. Total quantity used in the instrument (TQ column).

e. Recommended spare part quantity for complete maintenance during one year of isolated service (RS column).

6-3. Miscellaneous and cabinet parts not indexed by reference designators are listed at the end of Table 6-1.

6-4. ORDERING INFORMATION.

6-5. To order a replacement part, address order or inquiry either to your nearest Hewlett-Packard field office or to

CUSTOMER SERVICE
Hewlett-Packard Company
395 Page Mill Road
Palo Alto, California

or, in Western Europe, to

Hewlett-Packard S.A.
54 Route des Acacias
Geneva, Switzerland

6-6. Specify the following information for each part:

a. Model and complete serial number of instrument.

b. Hewlett-Packard stock number.

c. Circuit reference designator.

d. Description.

6-7. To order a part not listed in Tables 6-1 and 6-2, give a complete description of the part and include its function and location.

REFERENCE DESIGNATORS

A	= assembly	F	= fuse	P	= plug	V	= vacuum tube, neon bulb, photocell, etc.
B	= motor	FL	= filter	Q	= transistor	W	= cable
C	= capacitor	J	= jack	R	= resistor	X	= socket
CR	= diode	K	= relay	RT	= thermistor	Y	= crystal
DL	= delay line	L	= inductor	S	= switch	Z	= network
DS	= device signaling (lamp)	M	= meter	T	= transformer		
E	= misc electronic part	MP	= mechanical part				

ABBREVIATIONS

A	= amperes	ELECT	= electrolytic	MOM	= momentary	RH	= round head
A.F.C	= automatic frequency control	ENCAP	= encapsulated	MTG	= mounting	RMO	= rack mount only
AMP	= amplifier			MY	= mylar	RMS	= root-mean-square
		F	= farads			ROT	= rotary
B.F.O.	= beat frequency oscillator	FH	= flat head	NC	= normally closed		
BE CU	= beryllium copper	FIL H	= fillister head	NE	= neon	S-B	= slow-blow
BH	= binder head	FXD	= fixed	NI PL	= nickel plate	SE	= selenium
BP	= bandpass			NO	= normally open	SECT	= section(s)
BRS	= brass	GE	= germanium	NPO	= negative positive zero (zero temperature coefficient)	SEMICON	= semiconductor
BWO	= backward wave oscillator	GL	= glass			SI	= silicon
		GRD	= ground(ed)			SIL	= silver
CER	= ceramic			NSR	= not separately replaceable	SL	= slide
CMO	= cabinet mount only	H	= henries			SPL	= special
COEF	= coefficient	HEX	= hexagonal			SST	= stainless steel
COM	= common	HG	= mercury	OBD	= order by description		
COMP	= composition	HR	= hour(s)	OH	= oven head	TA	= tantalum
CONN	= connector			OX	= oxide	TD	= time delay
CP	= cadmium plate	IMPG	= impregnated			TI	= titanium
CRT	= cathode-ray tube	INCD	= incandescent	P	= peak	TOG	= toggle
		INS	= insulation(ed)	PC	= printed circuit board	TOL	= tolerance
DEPC	= deposited carbon			PF	= picofarads = 10^{-12} farads	TRIM	= trimmer
		K	= kilo = 1000			TWT	= traveling wave tube
EIA	= Tubes or transistors meeting Electronic Industries' Association standards will normally result in instrument operating within specifications; tubes and transistors selected for best performance will be supplied if ordered by hp stock numbers.	LIN	= linear taper	PH BRZ	= phosphor bronze		
		LK	= lock	PIV	= peak inverse voltage	U	= micro = 10^{-6}
		LOG	= logarithmic taper	POLY	= polystyrene		
		LPF	= low pass filter	POR	= porcelain	VAC	= vacuum
				POS	= position(s)	VAR	= variable
		M	= milli = 10^{-3}	POT	= potentiometer		
		MEG	= meg = 10^{6}	PP	= peak-to-peak	W	= watts
		METFLM	= metal film	PT	= point	W/	= with
		MFR	= manufacturer			W/O	= without
		MINAT	= miniature	RECT	= rectifier	WW	= wirewound
				RF	= radio frequency		

01194-8

Table 6-1. Reference Designation Index

Reference Designation	Stock No.	Description #	Note
A1	175A-65S	ASSY:VERTICAL INPUT	
A2	175A-65T	ASSY:VERTICAL OUTPUT	
A3 THRU			
A100		NOT ASSIGNED	
A101	175A-65R	ASSY:SWEEP	
A102	175A-19C	ASSY: TRIGGER SELECTOR SWITCH	
A103	175A-19G	ASSY:SLOPE SWITCH	
A104 THRU			
A200		NOT ASSIGNED	
A201	175A-65M	ASSY:HORIZONTAL AMPLIFIER	
A202	175A-19F	ASSY:HORIZONTAL DISPLAY SWITCH	
A203	2100-0345	R:VAR 12K,35K,100K-1K OHMS	
A204	2100-0414	ASSY:HORIZONTAL POSITION	
A205 THRU			
A300		NOT ASSIGNED	
A301	175A-65L	ASSY:HV REGULATOR	
A302	175A-65K	ASSY:HV SUPPLY	
A303		NOT ASSIGNED	
A304	2100-0444	R:VAR DUAL 1.2 MEGOHM, 600 OHM	
A305 THRU			
A400		NOT ASSIGNED	
A401	175A-65P	ASSY:LV POWER SUPPLY	
A402	2100-0344	R:VAR 2.5K,2.5K-12.5K OHMS	
A403 THRU			
A700		NOT ASSIGNED	
A701	175A-65J	ASSY: GATE&SWEEP OUTPUT OPTION 08	
A702 THRU			
A1000		NOT ASSIGNED	
A1001	175A-65H	ASSY: SWEEP TIME BOARD	
A1002	175A-19E	ASSY:SWEEP TIME SWITCH	
A1003	2100-0347	R:VAR QUAD 4X25K OHM 30% 1/4W	
B401	3140-0020	MOTOR:AC FOUR P 115 VAC 1700 RPM 1/300HP	
C3	0150-0052	C:FXD CER 0.05UF 20% 400VDCW	
C4	0180-0089	C:FXD ELECT 10 UF 150VDCW	
C5	0150-0052	C:FXD CER 0.05UF 20% 400VDCW	
C6	0150-0070	C:FXD CER .02UF 20% 500VDCW	
C7	0150-0052	C:FXD CER 0.05UF 20% 400VDCW	
C8	0150-0052	C:FXD CER 0.05UF 20% 400VDCW	
C9	0150-0052	C:FXD CER 0.05UF 20% 400VDCW	
C10	0150-0088	C:FXD CER 3.9PF 500VDCW	
C11	0150-0052	C:FXD CER 0.05UF 20% 400VDCW	
C12 THRU			
C15		NOT ASSIGNED	
C16	0150-0052	C:FXD CER 0.05UF 20% 400VDCW	
C17	0150-0029	C:FXD TI 1PF 10% 500VDCW	
C18	0150-0029	C:FXD TI 1PF 10% 500VDCW	
C19	0150-0012	C:FXD CER 0.01UF 20% 1000VDCW	
C20	0150-0012	C:FXD CER 0.01UF 20% 1000VDCW	
C21	0150-0052	C:FXD CER 0.05UF 20% 400VDCW	
C22	0130-0001	C:VAR CER 7-45PF 500VDCW	

See list of abbreviations in introduction to this section

Table 6-1. Reference Designation Index (Cont'd)

Reference Designation	Stock No.	Description #	Note
C23	0150-0052	C:FXD CER 0.05 UF 20% 400VDCW	
C24	0150-0052	C:FXD CER 0.05 UF 20% 400VDCW	
C25	0150-0052	C:FXD CER 0.05 UF 20% 400VDCW	
C26	0150-0052	C:FXD CER 0.05 UF 20% 400VDCW	
C27	0150-0012	C:FXD CER 0.01UF 20% 1000VDCW	
C28	0150-0012	C:FXD CER 0.01UF 20% 1000VDCW	
C29	0150-0070	C:FXD CER .02 UF 20% 500VDCW	
C30	0150-0070	C:FXD CER .02 UF 20% 500VDCW	
C31	0150-0052	C:FXD CER 0.05 UF 20% 400VDCW	
C32	0150-0012	C:FXD CER 0.01UF 20% 1000VDCW	
C33	0130-0001	C:VAR CER 7-45 PF 500VDCW	
C34	0140-0039	C:FXD MICA 47PF 5% 300VDCW	
C35	0130-0019	C:VAR CER 4-30 PF N 650	
C36	0132-0004	C:VAR POLY .7-3PF 350VDCW	
C37	0132-0004	C:VAR POLY .7-3PF 350VDCW	
C38	0150-0052	C:FXD CER 0.05 UF 20% 400VDCW	
C39 THRU			
C41		NOT ASSIGNED	
C42	0140-0025	C:FXD MICA 68 PF 10% 500 VDCW	
C43	0150-0070	C:FXD CER .02 UF 20% 500VDCW	
C44	0150-0052	C:FXD CER 0.05 UF 20% 400VDCW	
C45	0150-0070	C:FXD CER .02 UF 20% 500VDCW	
C46	0150-0052	C:FXD CER 0.05 UF 20% 400VDCW	
C47	0150-0070	C:FXD CER .02UF 20% 500VDCW	
C48		NOT ASSIGNED	
C49	0150-0070	C:FXD CER .02UF 20% 500VDCW	
C50	0150-0052	C:FXD CER 0.05UF 20% 400VDCW	
C51	0150-0070	C:FXD CER .02UF 20% 500VDCW	
C52	0140-0041	C:FXD MICA 100 PF 5% 500 VDCW	
C53 THRU			
C104		NOT ASSIGNED	
C105	0150-0014	C:FXD CER 5000PF MIN 500VDCW	
C106		NOT ASSIGNED	
C107	0150-0069	C:FXD CER 1000 PF 500VDCW	
C108		NOT ASSIGNED	
C109	0150-0070	C:FXD CER .02UF 20% 500VDCW	
C110	0150-0070	C:FXD CER .02UF 20% 500VDCW	
C111	0170-0022	C:FXD MY 0.1UF 20% 600VDCW	
C112	0150-0023	C:FXD CER 2000PF 20% 1000VDCW	
C113	0150-0023	C:FXD CER 2000PF 20% 1000VDCW	
C114	0150-0070	C:FXD CER .02UF 20% 500VDCW	
C115	0140-0092	C:FXD MICA 240 PF 5% 500 VDCW	
C116 THRU			
C119		NOT ASSIGNED	
C120	0150-0064	C:FXD CER 15 PF 5% NPO 500VDCW	
C121	0140-0054	C:FXD MICA 100 PF 10% 500 VDCW	
C122	0150-0081	C:FXD CER .01UF -20% +80% 500VDCW	
C123	0140-0031	C:FXD MICA 220 PF 10% 500 VDCW	
C124	0140-0107	C:FXD MICA 507 PF 2% 500 VDCW	
C125	0130-0006	C:VAR CER 5-20 PF 500VDCW	
C126	0150-0081	C:FXD CER .01UF -20% +80% 500VDCW	

See list of abbreviations in introduction to this section

Table 6-1. Reference Designation Index (Cont'd)

Reference Designation	Stock No.	Description #	Note
C127	0150-0069	C:FXD CER 1000PF 500VDCW	
C128	0140-0052	C:FXD MICA 33 PF 5% 300VDCW	
C129	0140-0039	C:FXD MICA 47PF 5% 300VDCW	
C130 THRU			
C139		NOT ASSIGNED	
C140	0150-0069	C:FXD CER 1000 PF 500VDCW	
C141	0150-0081	C:FXD CER .01UF -20% +80% 500VDCW	
C142	0140-0016	C:FXD MICA 390 PF 5% 500VDCW	
C143	0150-0069	C:FXD CER 1000PF 500VDCW	
C144	0140-0041	C:FXD MICA 100 PF 5% 500 VDCW	
C145 THRU			
C148		NOT ASSIGNED	
C149	0150-0070	C:FXD CER .02UF 20% 500VDCW	
C150	0150-0081	C:FXD CER .01UF -20% +80% 500VDCW	
C151	0150-0081	C:FXD CER .01UF -20% +80% 500VDCW	
C152	0150-0081	C:FXD CER .01UF -20% +80% 500VDCW	
C153	0150-0081	C:FXD CER .01UF -20% +80% 500VDCW	
C154	0150-0081	C:FXD CER .01UF -20% +80% 500VDCW	
C155 THRU			
C200		NOT ASSIGNED	
C201	0170-0022	C:FXD MY 0.1UF 20% 600VDCW	
C202	0140-0004	C:FXD MICA 15 PF 10% 500VDCW	
C203	0130-0008	C:VAR CER 8-50PF N750	
C204	0140-0055	C:FXD MICA 150 PF 10% 500 VDCW	
C205		NOT ASSIGNED	
C206	0150-0086	C:FXD CER 4700 PF 20% 500 VDCW	
C207	0150-0070	C:FXD CER .02UF 20% 500VDCW	
C208 THRU			
C210		NOT ASSIGNED	
C211	0130-0006	C:VAR CER 5-20PF 500VDCW	
C212	0131-0004	C:VAR MICA 16-150 PF 175VDCW	
C213	0130-0003	C:FXD CER 1.5-7PF 500VDCW	
C214	0140-0006	C:FXD MICA 82 PF 10% 500VDCW	
C215	0150-0088	C:FXD CER 3.9 PF 500VDCW	
C216	0140-0201	C:FXD MICA 12 PF 5% 500VDCW	
C217	0140-0201	C:FXD MICA 12 PF 5% 500VDCW	
C218 THRU			
C220		NOT ASSIGNED	
C221	0150-0070	C:FXD CER .02UF 20% 500VDCW	
C222	0150-0070	C:FXD CER .02UF 20% 500VDCW	
C223	0150-0070	C:FXD CER .02UF 20% 500VDCW	
C224	0150-0086	C:FXD CER 4700 PF 20% 500 VDCW	
C225	0150-0070	C:FXD CER .02UF 20% 500VDCW	
C226 THRU			
C309		NOT ASSIGNED	
C310	0150-0085	C:FXD CER 2200 PF 20% 500 VDCW	
C311	0150-0012	C:FXD CER 0.01 UF 20% 1000VDCW	
C312	0150-0036	C:FXD CER 470 PF 20% 6KV	
C313	0160-0224	C:FXD CER 620PF 10,000VDCW	
C314	0160-0151	C:FXD CER 4700PF +80%-20% 4000VDCW	
C315		NOT ASSIGNED	
C316	0160-0151	C:FXD CER 4700PF +80%-20% 4000VDCW	

See list of abbreviations in introduction to this section

Table 6-1. Reference Designation Index (Cont'd)

Reference Designation	Stock No.	Description #	Note
C317 THRU			
C318		NOT ASSIGNED	
C319	0150-0052	C:FXD CER 0.05 UF 20% 400VDCW	
C320	0170-0065	C:FXD MY 0.047UF 10% 140VDCW	
C321	0160-0151	C:FXD CER 4700PF +80%-20% 4000VDCW	
C322	0180-0163	C:FXD ELECT 20 UF 450VDCW	
C323	0170-0022	C:FXD MY 0.1UF 20% 600VDCW	
C324	0150-0081	C:FXD CER .01UF +80%-20% 500VDCW	
C325	0160-0151	C:FXD CER 4700PF +80%-20% 4000VDCW	
C326	0150-0081	C:FXD CER .01 UF +80%-20% 500VDCW	
C327	0150-0081	C:FXD CER .01 UF +80% -20% 500VDCW	
C328	0150-0081	C:FXD CER .01 UF +80%-20% 500VDCW	
C329		NOT ASSIGNED	
C330	0160-0151	C:FXD CER 4700PF +80%-20% 4000VDCW	
C331	0160-0151	C:FXD CER 4700PF +80%-20% 4000VDCW	
C332	0160-0151	C:FXD CER 4700PF +80%-20% 4000VDCW	
C333	0140 0034	C:FXD MICA 22 PF 5% 500 VDCW	
C334	0150-0024	C:FXD CER 0.02 UF +80%-20% 600VDCW	
C335	0150-0052	C:FXD CER 0.05 UF 20% 400VDCW	
C336 THRU			
C339		NOT ASSIGNED	
C340	0150-0052	C:FXD CER 0.05 UF 20% 400VDCW	
C341	0170-0027	C:FXD MY .02MF 5% 200VDCW	
C342	0180-0058	C:FXD ELECT 50UF -10%+100% 25VDCW	
C343	0170-0027	C:FXD MY .02MF 5% 200VDCW	
C344 THRU			
C400		NOT ASSIGNED	
C401	0150-0052	C:FXD CER 0.05UF 20% 400VDCW	
C402	0150-0052	C:FXD CER 0.05UF 20% 400VDCW	
C403 THRU			
C420		NOT ASSIGNED	
C421	0180-0133	C:FXD ELECT 135UF -10+50% 400VDCW	
C422	0180-0024	C:FXD ELECT 40UF 450VDCW	
C423	0160-0127	C:FXD CER 1UF 20% 25VDCW	
C424	0160-0013	C:FXD MY 0.1UF 10% 400VDCW	
C425 THRU			
C427		NOT ASSIGNED	
C428	0150-0024	C:FXD CER 0.02UF +80%-20% 600VDCW	
C429 THRU			
C440		NOT ASSIGNED	
C441	0180-0131	C:FXD ELECT 150 PF +50-10% 200VDCW	
C442	0180-0131	C:FXD ELECT 150 PF +50-10% 200VDCW	
C443	0180-0132	C:FXD ELECT 60 UF +100-10% 200VDCW	
C444	0150-0084	C:FXD CER 0.1UF +80-20% 50VDCW	
C445	0180-0089	C:FXD ELECT 10UF-10%+100% 150VDCW	
C446 THRU			
C447		NOT ASSIGNED	
C448	0150-0024	C:FXD CER 0.02UF +80%-20% 600VDCW	
C449 THRU			
C460		NOT ASSIGNED	
C461	0180-0131	C:FXD ELECT 150 PF +50-10% 200VDCW	
C462	0180-0131	C:FXD ELECT 150 PF +50-10% 200VDCW	

See list of abbreviations in introduction to this section

Table 6-1. Reference Designation Index (Cont'd)

Reference Designation	Stock No.	Description #	Note
C463	0180-0132	C:FXD ELECT 60 UF +100-10% 200VDCW	
C464	0150-0052	C:FXD CER 0.05UF 20% 400VDCW	
C465	0150-0084	C:FXD CER 0.1UF +80-20% 50VDCW	
C466	0180-0059	C:FXD ELECT 10 UF +100-10% 25VDCW	
C467		NOT ASSIGNED	
C468	0150-0024	C:FXD CER 0.02UF +80%-20% 600VDCW	
C469 THRU			
C480		NOT ASSIGNED	
C481	0180-0134	C:FXD ELECT 7000UF -10+100% 25VDCW	
C482	0180-0059	C:FXD ELECT 10 UF +100-10% 25VDCW	
C483	0180-0059	C:FXD ELECT 10 UF +100-10% 25VDCW	
C484 THRU			
C487		NOT ASSIGNED	
C488	0150-0052	C:FXD CER 0.05UF 20% 400VDCW	
C489 THRU			
C710		NOT ASSIGNED	
C711	0150-0081	C:FXD CER .01 UF 500VDCW	
C712 THRU			
C1001		NOT ASSIGNED	
C1002	0160-0015	C:FXD PAPER 0.47UF 10% 200VDCW	
C1003	0160-0005	C:FXD MY 0.047UF 10% 600VDCW	
C1004	0160-0010	C:FXD MY 4700PF 10% 600VDCW	
C1005	0140-0085	C:FXD MICA 470 PF 5% 500 VDCW	
C1006	0170-0018	C:FXD MY 1UF 5% 200VDCW	
C1007	0170-0019	C:FXD MY 0.1 UF 5% 200VDCW	
C1008	0170-0017	C:FXD MY 0.01UF 5% 400VDCW	
C1009	0140-0018	C:FXD MICA 1000 PF 5% 500VDCW	
C1010	0130-0001	C:VAR CER 7-45PF 500VDCW	
C1011	0140-0006	C:FXD MICA 82PF 10% 500VDCW	
C1012	0130-0001	C:VAR CER 7-45PF 500VDCW	
C1013	0140-0082	C:FXD MICA 68 PF 5% 500 VDCW	
C1014	0130-0001	C:VAR CER 7-45PF 500VDCW	
C1015	0140-0034	C:FXD MICA 22 PF 5% 500 VDCW	
C1016	0130-0001	C:VAR CER 7-45PF 500VDCW	
CR1	1910-0016	SEMICON DEVICE:DIODE GERMANIUM	
CR2	1910-0016	SEMICON DEVICE:DIODE GERMANIUM	
CR3	1910-0016	SEMICON DEVICE:DIODE GERMANIUM	
CR4	1910-0016	SEMICON DEVICE:DIODE GERMANIUM	
CR5 THRU			
CR101		NOT ASSIGNED	
CR102	1912-0006	SEMICON DEVICE:DIODE GER TUNNEL	
CR103	1901-0040	SEMICON DEVICE:DIODE	
CR104	1901-0034	SEMICON DEVICE:DIODE	
CR105	1902-0017	SEMICON DEVICE:DIODE SI	
CR106	1901-0044	SEMICON DEVICE:DIODE SILICON	
CR107 THRU			
CR204		NOT ASSIGNED	
CR205	1910-0016	SEMICON DEVICE:DIODE GE	
CR206 THRU			
CR300		NOT ASSIGNED	
CR301	1902-0064	SEMICON DEVICE:DIODE ZENER 1N755A	
CR302	1901-0033	SEMICON DEVICE:DIODE 1N485B	

See list of abbreviations in introduction to this section

Table 6-1. Reference Designation Index (Cont'd)

Reference Designation	Stock No.	Description #	Note
CR303	1901-0025	SEMICON DEVICE:DIODE	
CR304 THRU			
CR420		NOT ASSIGNED	
CR421	1901-0051	SEMICON DEVICE:DIODE SPL1N1566A	
CR422	1901-0051	SEMICON DEVICE:DIODE SPL1N1566A	
CR423	1901-0051	SEMICON DEVICE:DIODE SPL1N1566A	
CR424	1901-0051	SEMICON DEVICE:DIODE SPL1N1566A	
CR425	1902-0034	SEMICON DEVICE:DIODE	
CR426 THRU			
CR440		NOT ASSIGNED	
CR441	1901-0051	SEMICON DEVICE:DIODE SPL1N1566A	
CR442	1901-0051	SEMICON DEVICE:DIODE SPL1N1566A	
CR443	1901-0051	SEMICON DEVICE:DIODE SPL1N1566A	
CR444	1901-0051	SEMICON DEVICE:DIODE SPL1N1566A	
CR445	1901-0051	SEMICON DEVICE:DIODE SPL 1N1566A	
CR446 THRU			
CR460		NOT ASSIGNED	
CR461	1901-0051	SEMICON DEVICE:DIODE SPL1N1566A	
CR462	1901-0051	SEMICON DEVICE:DIODE SPL1N1566A	
CR463	1901-0051	SEMICON DEVICE:DIODE SPL1N1566A	
CR464	1901-0051	SEMICON DEVICE:DIODE SPL1N1566A	
CR465	1902-0034	SEMICON DEVICE:DIODE	
CR466 THRU			
CR480		NOT ASSIGNED	
CR481	1901-0032	SEMICON DEVICE:DIODE 1N3209JUNCTION	
CR482	1901-0032	SEMICON DEVICE:DIODE 1N3209JUNCTION	
CR483	1902-0034	SEMICON DEVICE:DIODE	
DL1	8120-0092	DELAY LINE	
DS301	1450-0048	LIGHT:INDICATOR NE-2H	
DS302 THRU			
DS400		NOT ASSIGNED	
DS401	2140-0008	LAMP:NEON-NE-2	
F401	2110-0023	FUSE:CARTRIDGE 6.25 AMP 250V SLOW BLOW 115V ONLY	
F401	2110-0029	FUSE: 3 AMP 230V ONLY	
F402 THRU			
F420		NOT ASSIGNED	
F421	2110-0012	FUSE:CARTRIDGE 1/2AMP 250V	
F422 THRU			
F440		NOT ASSIGNED	
F441	2110-0033	FUSE: 0.75AMP 250V	
F442 THRU			
F460		NOT ASSIGNED	
F461	2110-0033	FUSE: 0.75AMP 250V	
F462 THRU			
F480		NOT ASSIGNED	
F481	2110-0035	FUSE:CARTRIDGE 8 AMP SLOW BLOW	
J1	1251-0007	CONNECTOR:FEMALE 16-PIN	
J2 THRU			
J100		NOT ASSIGNED	

See list of abbreviations in introduction to this section

Table 6-1. Reference Designation Index (Cont'd)

Reference Designation	Stock No.	Description #	Note
J101	1250-0123	CONNECTOR:BNC UG-1094/U	
J102 THRU			
J104		NOT ASSIGNED	
J105	1251-0137	RECEPTACLE 32 CONTACT HORIZONTAL PLUG IN	
J106 THRU			
J200		NOT ASSIGNED	
J201	1250-0123	CONNECTOR:BNC UG-1094/U	
J202 THRU			
J300		NOT ASSIGNED	
J301	1250-0123	CONNECTOR:BNC UG-1094/U	
J302	1251-0228 & 1251-0229	HEAD BANANA JACK	
J303	1251-0228 & 1251-0229	HEAD-BANANA JACK	
J304	1251-0228 & 1251-0229	HEAD-BANANA JACK	
J305 THRU			
J400		NOT ASSIGNED	
J401	1251-0148	CONNECTOR:POWER	
J402 THRU			
J710		NOT ASSIGNED	
J711	1250-0123	CONNECTOR:BNC (OPTION 08 ONLY)	
J712	1250-0123	CONNECTOR:BNC (OPTION 08 ONLY)	
L7	175A-60F	COIL: VAR RF	
L8	175A-60F	COIL: VAR RF	
L9	9140-0018	COIL:FXD 1UH	
L10	9140-0018	COIL:FXD 1UH	
L11	9140-0080	COIL:RF. 0.18 MH 10%	
L12	9140-0080	COIL:RF. 0.18 MH 10%	
L13	9140-0088	COIL:RF .33UH	
L14	9140-0094	COIL:FXD RF: 0.68UH	
L15	9140-0080	COIL:RF. 0.18 MH 10%	
L16	9140-0080	COIL:RF. 0.18 MH 10%	
L17	9140-0024	COIL:FXD 0.68 UH	
L18	9140-0024	COIL:FXD 0.68 UH	
L19 THRU			
L20		NOT ASSIGNED	
L21	9140-0024	COIL:FXD 0.68 UH	
L22	9140-0024	COIL:FXD 0.68 UH	
L23	9140-0088	COIL:RF .33UH	
L24	9140-0088	COIL:RF .33UH	
L25 THRU			
L30		NOT ASSIGNED	
L31	9140-0018	COIL:FXD 1UH	
L32	9140-0018	COIL:FXD 1UH	
L33	9140-0088	COIL:RF .33UH	
L34	9140-0088	COIL:RF .33UH	
L35 THRU			
L102		NOT ASSIGNED	
L103	9140-0074	COIL:FXD RF: 10UH	
L104	9140-0121	COIL:FXD 1.8 UH	

See list of abbreviations in introduction to this section

Table 6-1. Reference Designation Index (Cont'd)

Reference Designation	Stock No.	Description #	Note
L105	9140-0121	COIL:FXD 1.8 UH	
L106 THRU			
L200		NOT ASSIGNED	
L201	9140-0118	COIL:FXD 500 UH 5%	
L202	9140-0118	COIL:FXD 500 UH 5%	
L203	9140-0047	COIL:RF 20UH	
L204	9140-0047	COIL:RF 20UH	
L205 THRU			
L303		NOT ASSIGNED	
L304	5060-0410	COIL:ALIGNMENT	
L305 THRU			
L480		NOT ASSIGNED	
L481	9110-0050	CHOKE:FILTER 10MH	
P401		N.S.R. PART OF W401	
P402		N.S.R. PART OF W401	
Q103	1850-0091	TRANSISTOR:GERMANIUM 2N2048 PNP	
Q104 THRU			
Q300		NOT ASSIGNED	
Q301	1850-0062	TRANSISTOR:GERMANIUM	
Q302	1850-0062	TRANSISTOR:GERMANIUM	
Q303 THRU			
Q420		NOT ASSIGNED	
Q421	1850-0098	TRANSISTOR:GERMANIUM PNP	
Q422	1850-0098	TRANSISTOR:GERMANIUM PNP	
Q423	1850-0098	TRANSISTOR:GERMANIUM PNP	
Q424	1851-0017	TRANSISTOR:2N1304	
Q425	1850-0062	TRANSISTOR:GERMANIUM	
Q426 THRU			
Q440		NOT ASSIGNED	
Q441	1850-0098	TRANSISTOR:GERMANIUM PNP	
Q442	1850-0098	TRANSISTOR:GERMANIUM PNP	
Q443	1851-0017	TRANSISTOR:2N1304	
Q444	1850-0062	TRANSISTOR:GERMANIUM	
Q445 THRU			
Q460		NOT ASSIGNED	
Q461	1850-0098	TRANSISTOR:GERMANIUM PNP	
Q462	1850-0062	TRANSISTOR:GERMANIUM	
Q463	1850-0062	TRANSISTOR:GERMANIUM	
Q464	1850-0062	TRANSISTOR:GERMANIUM	
Q465 THRU			
Q480		NOT ASSIGNED	
Q481	1850-0021	TRANSISTOR:GERMANIUM 2N441 PNP	
Q482	1850-0098	TRANSISTOR:GERMANIUM PNP	
Q483	1850-0062	TRANSISTOR:GERMANIUM	
Q484	1850-0062	TRANSISTOR:GERMANIUM	
Q485 THRU			
Q710		NOT ASSIGNED	
Q711	1851-0017	TRANSISTOR:2N1304	
Q712	1851-0017	TRANSISTOR:2N1304	
R5	0690-1001	R:FXD COMP 10 OHMS 10% 1W	
R6	0761-0022	R:FXD MET OX 620 OHM 5% 1W	

See list of abbreviations in introduction to this section

Table 6-1. Reference Designation Index (Cont'd)

Reference Designation	Stock No.	Description #	Note
R7	0687-1001	R:FXD COMP 10 OHM 10% 1/2W	
R8	0687-3331	R:FXD COMP 33K OHMS 10% 1/2W	
R9	0815-0022	R:FXD WW 1600 OHM 5% 10W	
R10	0815-0011	R:FXD WW 63C OHM 5% 10W	
R11	0687-2201	R:FXD COMP 22 OHMS 10% 1/2W	
R12	0767-0021	R:FXD MET FLM 2700 OHM 5% 3W	
R13	0684-1051	R:FXD COMP 1 MEGOHM 10% 1/4W	
R14	0684-1051	R:FXD COMP 1 MEGOHM 10% 1/4W	
R15	0727-0110	R:FXD DEPC 1500 OHM 1% 1/2W	
R16	0727-0110	R:FXD DEPC 1500 OHM 1% 1/2W	
R17	0727-0110	R:FXD DEPC 1500 OHM 1% 1/2W	
R18	0727-0110	R:FXD DEPC 1500 OHM 1% 1/2W	
R19	0683-6805	R:FXD COMP 68 OHMS 5% 1/4W	
R20	0683-6805	R:FXD COMP 68 OHMS 5% 1/4W	
R21	0767-0006	R:FXD MET FLM 6.5K OHM 5% 3W	
R22	0767-0006	R:FXD MET FLM 6.5K OHM 5% 3W	
R23	0683-3915	R:FXD COMP 390 OHMS 5% 1/4W	
R24	0683-3915	R:FXD COMP 390 OHMS 5% 1/4W	
R25	0686-1515	R:FXD COMP 150 OHMS 5% 1/2W	
R26	0686-1515	R:FXD COMP 150 OHMS 5% 1/2W	
R27 THRU			
R29		NOT ASSIGNED	
R30	0767-0020	R:FXD MET FLM 2200 OHMS 5% 3W	
R31	0684-8211	R:FXD COMP 820 OHM 10% 1/4W	
R32	0684-8211	R:FXD COMP 820 OHM 10% 1/4W	
R33	0683-3315	R:FXD COMP 330 OHMS 5% 1/4W	
R34	0683-3315	R:FXD COMP 330 OHMS 5% 1/4W	
R35	0727-0110	R:FXD DEPC 1500 OHM 1% 1/2W	
R36	0727-0110	R:FXD DEPC 1500 OHM 1% 1/2W	
R37	0727-0110	R:FXD DEPC 1500 OHM 1% 1/2W	
R38	0727-0110	R:FXD DEPC 1500 OHM 1% 1/2W	
R39	0687-5621	R:FXD COMP 5600 OHMS 10% 1/2W	
R40	0687-5621	R:FXD COMP 5600 OHMS 10% 1/2W	
R41	0761-0010	R:FXD MET OX 1.8K OHM 5% 1W	
R42	0761-0010	R:FXD MET OX 1.8K OHM 5% 1W	
R43	0767-0005	R:FXD MET FLM 5.6K OHM 5% 3W	
R44	0767-0005	R:FXD MET FLM 5.6K OHM 5% 3W	
R45	2100-0151	R:VAR 500 OHM 20% 2/10W LIN	
R46	0686-6215	R:FXD COMP 620 OHMS 5% 1/2W	
R47	0683 2715	R:FXD COMP 270 OHMS 5% 1/4W	
R48	0683 2715	R:FXD COMP 270 OHMS 5% 1/4W	
R49	0687-4721	R:FXD COMP 4700 OHMS 10% 1/2W	
R50	0687-4721	R:FXD COMP 4700 OHMS 10% 1/2W	
R51	0727-0110	R:FXD DEPC 1500 OHM 1% 1/2W	
R52	0727-0110	R:FXD DEPC 1500 OHM 1/2W	
R53	0727-0110	R:FXD DEPC 1500 OHM 1% 1/2W	
R54	0727-0110	R:FXD DEPC 1500 OHM 1% 1/2W	
R55	0764-0017	R:FXD MET OX 1.6K OHM 5% 2W	
R56 THRU			
R58		NOT ASSIGNED	
R59	0767-0021	R:FXD MET FLM 2.7K OHM 5% 3W	

See list of abbreviations in introduction to this section

Table 6-1. Reference Designation Index (Cont'd)

Reference Designation	Stock No.	Description #	Note
R60	0767-0021	R:FXD MET FLM 2.7K OHM 5% 3W	
R61 THRU			
R62		NOT ASSIGNED	
R63	0773-0020	R:FXD MET FLM 2.7K OHM 5% 5W	
R64	0773-0020	R:FXD MET FLM 2.7K OHM 5% 5W	
R65		NOT ASSIGNED	
R66	0683-2205	R:FXD COMP 22 OHM 5% 1/4W	
R67	0683-4305	R:FXD COMP 43 OHM 5% .25W	
R68	0684-2221	R:FXD COMP 2200 OHMS 10% 1/4W	
R69	0683-1515	R:FXD COMP 150 OHMS 5% 1/4W	
R70	0683-1515	R:FXD COMP 150 OHMS 5% 1/4W	
R71	0727-0333	R:FXD DEPC 402K OHMS 1% 1/2W	
R72	0727-0216	R:FXD DEPC 136.7K OHM 1% 1/2W	
R73	0727-0216	R:FXD DEPC 136.7K OHM 1% 1/2W	
R74	0727-0333	R:FXD DEPC 402K OHMS 1% 1/2W	
R75 THRU			
R76		NOT ASSIGNED	
R77	0764-0001	R:FXD MET OX 6.2K OHM 5% 2W	
R78	0764-0001	R:FXD MET OX 6.2K OHM 5% 2W	
R79 THRU			
R81		NOT ASSIGNED	
R82	0683-1255	R:FXD COMP 1.2 MEGOHM 5% 1/4W	
R83	0767-0006	R:FXD MET FLM 6.5K OHM 5% 3W	
R84	0687-2701	R:FXD COMP 27 OHMS 10% 1/2W	
R85	0687-1051	R:FXD COMP 1 MEGOHM 10% 1/2W	
R86		NOT ASSIGNED	
R87	0687-1511	R:FXD COMP 150 OHMS 10% 1/2W	
R88	0687-5611	R:FXD COMP 560 OHMS 10% 1/2W	
R89	0687-2701	R:FXD COMP 27 OHMS 10% 1/2W	
R90	0687-1051	R:FXD COMP 1 MEGOHM 10% 1/2W	
R91		NOT ASSIGNED	
R92	0687-1511	R:FXD COMP 150 OHMS 10% 1/2W	
R93	0686-7515	R:FXD COMP 750 OHMS 5% 1/2W	
R94	0687-2701	R:FXD COMP 27 OHMS 10% 1/2W	
R95	0684-1051	R:FXD COMP 1 MEGOHM 10% 1/4W	
R96	0767-0006	R:FXD MET FLM 6.5K OHM 5% 3W	
R97	0684-4711	R:FXD COMP 470 OHMS 10% 1/4W	
R98 THRU			
R103		NOT ASSIGNED	
R104	0687-1001	R:FXD COMP 10 OHM 10% 1/2W	
R105	0687-4741	R:FXD COMP 470K OHMS 10% 1/2W	
R106	0687-1051	R:FXD COMP 1 MEGOHM 10% 1/2W	
R107	0686-1245	R:FXD COMP 120K OHMS 5%1/2W	
R108		TRIGGER LEVEL RES NSR PART OF S102	
R109	0686-8225	R:FXD COMP 8200 OHMS 5% 1/2W	
R110	0687-2211	R:FXD COMP 220 OHM 10% 1/2W	
R111	0687-2211	R:FXD COMP 220 OHM 10% 1/2W	
R112	0693-1231	R:FXD COMP 12K OHMS 10% 2W	
R113	0687-5601	R:FXD COMP 56 OHMS 10% 1/2W	
R114	0687-5601	R:FXD COMP 56 OHMS 10% 1/2W	
R115	0764-0021	R:FXD MET FLM 9100 OHM 5% 2W	

See list of abbreviations in introduction to this section

Table 6-1. Reference Designation Index (Cont'd)

Reference Designation	Stock No.	Description #	Note
R116	2100-0234	R:VAR COMP 10K OHMS 20% LIN 2W	
R117		NOT ASSIGNED	
R118	0686-2205	R:FXD COMP 22 OHMS 5% 1/2W	
R119	0687-5601	R:FXD COMP 56 OHMS 10% 1/2W	
R120	2100-0388	R:VAR WW 20 OHM 20% LIN 2W	
R121	0686-4735	R:FXD COMP 47K OHM 5% 1/2W	
R122	0686-6825	R:FXD COMP 6800 OHMS 5% 1/2W	
R123	0687-5601	R:FXD COMP 56 OHMS 10% 1/2W	
R124	0686-5115	R:FXD COMP 510 OHMS 5% 1/2W	
R125 THRU R128		NOT ASSIGNED	
R129	0727-0224	R:FXD DEPC 249K OHM 1% 1/2W	
R130	0687-5601	R:FXD COMP 56 OHMS 10% 1/2W	
R131	0773-0005	R:FXD MET FLM 12K OHMS 5% 5W	
R132	0773-0006	R:FXD MET FLM 15K OHMS 5% 5W	
R133	0727-0208	R:FXD DEPC 100K OHM 1% 1/2W	
R134	0764-0019	R:FXD MET FLM 3900 OHM 5% 2W	
R135	0764-0020	R:FXD MET FLM 5600 OHM 5% 2W	
R136	0767-0004	R:FXD MET FLM 5K OHM 5% 3W	
R137	0687-5601	R:FXD COMP 56 OHMS 10% 1/2W	
R138	0687-5601	R:FXD COMP 56 OHMS 10% 1/2W	
R139	0687-8231	R:FXD COMP 82K OHMS 10% 1/2W	
R140	0693-1231	R:FXD COMP 12K OHMS 10% 2W	
R141	0727-0307	R:FXD DEPC 1650 OHM 1% 1/2W	
R142	0727-0243	R:FXD DEPC 499K OHM 1% 1/2W	
R143	0727-0243	R:FXD DEPC 499K OHM 1% 1/2W	
R144	0687-5601	R:FXD COMP 56 OHMS 10% 1/2W	
R145 THRU R150		NOT ASSIGNED	
R151	0693-4731	R:FXD COMP 47K OHMS 10% 2W	
R152	0690-1831	R:FXD COMP 18K OHMS 10% 1W	
R153	0687-5611	R:FXD COMP 560 OHMS 10% 1/2W	
R154	0687-5601	R:FXD COMP 56 OHMS 10% 1/2W	
R155	0687-5601	R:FXD COMP 56 OHMS 10% 1/2W	
R156	0686-1555	R:FXD COMP 1.5MEGOHMS 5% 1/2W	
R157	0687-4741	R:FXD COMP 470K OHMS 10% 1/2W	
R158	0687-1051	R:FXD COMP 1 MEGOHM 10% 1/2W	
R159	0686-2035	R:FXD COMP 20K OHMS 5% 1/2W	
R160	0686-1535	R:FXD COMP 15K OHMS 5% 1/2W	
R161	2100-0093	R:VAR COMP 20K OHM 20% LIN 1/5W	
R162	0693-1231	R:FXD COMP 12K OHMS 10% 2W	
R163	0687-5601	R:FXD COMP 56 OHMS 10% 1/2W	
R164 THRU R169		NOT ASSIGNED	
R170	2100-0094	R:VAR COMP 50K OHMS 30% LIN 1/5W	
R171	0686-4735	R:FXD COMP 47K OHM 5% 1/2W	
R172	2100-0348	R:VAR COMP 50K OHM 20J LIN 1W	
R173	0686-2035	R:FXD COMP 20K OHMS 5% 1/2W	
R174	0687-1841	R:FXD COMP 180K OHMS 10% 1/2W	
R175	0687-5601	R:FXD COMP 56 OHMS 10% 1/2W	
R176	0730-0041	R:FXD DEPC 25.2K OHMS 1% 1W	

See list of abbreviations in introduction to this section

Table 6-1. Reference Designation Index (Cont'd)

Reference Designation	Stock No.	Description #	Note
R177	0727-0208	R:FXD DEPC 100K OHM 1% 1/2W	
R178	0687-5601	R:FXD COMP 56 OHMS 10% 1/2W	
R179	0687-2261	R:FXD COMP 22 MEGOHM 10% 1/2W	
R180	0687-1021	R:FXD COMP 1000 OHMS 10% 1/2W	
R181	0724-0038	R:FXD DEPC 71.5 OHM 1% 1/4W	
R182	0730-0153	R:FXD DEPC 17.4K OHMS 1% 1W	
R183 THRU			
R189		NOT ASSIGNED	
R190	0687-5601	R:FXD COMP 56 OHMS 10% 1/2W	
R191	0687-5601	R:FXD COMP 56 OHMS 10% 1/2W	
R192	0687-1011	R:FXD COMP 100 OHMS 10% 1/2W	
R193	0687-5601	R:FXD COMP 56 OHMS 10% 1/2W	
R194	0687-1011	R:FXD COMP 100 OHMS 10% 1/2W	
R195 THRU			
R200		NOT ASSIGNED	
R201	0727-0261	R:FXD DEPC 900K OHMS 1% 1/2W	
R202	0727-0212	R:FXD DEPC 111K OHM 1% 1/2W	
R203 THRU			
R205		NOT ASSIGNED	
R206	0687-1051	R:FXD COMP 1 MEGOHM 10% 1/2W	
R207	0687-1031	R:FXD COMP 10K OHMS 10% 1/2W	
R208	0687-2211	R:FXD COMP 220 OHM 10% 1/2W	
R209	0690-1031	R:FXD COMP 10K OHMS 10% 1W	
R210	0687-5631	R:FXD COMP 56K OHMS 10% 1/2W	
R211	0687-5601	R:FXD COMP 56 OHMS 10% 1/2W	
R212		NSR PART OF A203	
R213	2100-0154	R:COMP 1000 OHM 30% LIN 3/10W	
R214	2100-0346	R:VAR COMP 10K OHM 20% LIN 1W	
R215	0689-2035	R:FXD COMP 20K OHM 5% 1W	
R216	0689-2035	R:FXD COMP 20K OHM 5% 1W	
R217	0687-3341	R:FXD COMP 330K OHMS 10% 1/2W	
R218 THRU			
R220		NOT ASSIGNED	
R221	0727-0281	R:FXD DEPC 1.39 MEGOHM 1% 1/2W	
R222	0687-2211	R:FXD COMP 220 OHM 10% 1/2W	
R223	0693-1831	R:FXD COMP 18K OHMS 10% 2W	
R224	0727-0218	R:FXD DEPC 180K OHM 1% 1/2W	
R225		NSR PART OF A203	
R226	0727-0149	R:FXD DEPC 7.96K OHMS 1% 1/2W	
R227		NSR PART OF A203	
R228	0687-5601	R:FXD COMP 56 OHMS 10% 1/2W	
R229	0727-0217	R:FXD DEPC 140K OHM 1% 1/2W	
R230		NSR PART OF A203	
R231	0687-1831	R:FXD COMP 18K OHMS 10% 1/2W	
R232	0687-5601	R:FXD COMP 56 OHMS 10% 1/2W	
R233	0690-2731	R:FXD COMP 27K OHMS 10% 1W	
R234	0687-3931	R:FXD COMP 39K OHMS 10% 1/2W	
R235	0767-0022	R:FXD MET FLM 4500 OHMS 5% 3W	
R236	0727-0233	R:FXD DEPC 333K OHM 1% 1/2W	
R237 THRU			
R239		NOT ASSIGNED	

 # See list of abbreviations in introduction to this section

Table 6-1. Reference Designation Index (Cont'd)

Reference Designation	Stock No.	Description #	Note
R240	0690-5621	R:FXD COMP 5600 OHM 10% 1W	
R241	0776-0007	R:FXD MET FLM 16K OHM 5% 7W	
R242	0687-5601	R:FXD COMP 56 OHMS 10% 1/2W	
R243	0687-5601	R:FXD COMP 56 OHMS 10% 1/2W	
R244	0687-5601	R:FXD COMP 56 OHMS 10% 1/2W	
R245	0776-0007	R:FXD MET FLM 16K OHM 5% 7W	
R246	0687-1011	R:FXD COMP 100 OHMS 10% 1/2W	
R247	0687-1011	R:FXD COMP 100 OHMS 10% 1/2W	
R248	0687-5601	R:FXD COMP 56 OHMS 10% 1/2W	
R249	0727-0124	R:FXD DEPC 3000 OHMS 1% 1/2W	
R250	0727-0124	R:FXD DEPC 3000 OHMS 1% 1/2W	
R251	0687-5601	R:FXD COMP 56 OHMS 10% 1/2W	
R252	0730-0069	R:FXD DEPC 100K OHMS 1% 1W	
R253	0730-0069	R:FXD DEPC 100K OHMS 1% 1W	
R254		NOT ASSIGNED	
R255	0690-1531	R:FXD COMP 15K OHM 10% 1W	
R256	0687-5601	R:FXD COMP 56 OHMS 10% 1/2W	
R257	0687-5601	R:FXD COMP 56 OHMS 10% 1/2W	
R258	0687-5601	R:FXD COMP 56 OHMS 10% 1/2W	
R259	0727-0287	R:FXD DEPC 2 MEGOHM 1% 1/2W	
R260	0687-1041	R:FXD COMP 100K OHM 10% 1/2W	
R261	0687-2251	R:FXD COMP 2.2MEGOHMS 10% 1/2W	
R262		NSR PART OF A204	
R263		NSR PART OF A204	
R264 THRU			
R309		NOT ASSIGNED	
R310	0687-1021	R:FXD COMP 1K OHM 10% 1/2W	
R311	0687-1041	R:FXD COMP 100K OHM 10% 1/2W	
R312	0687-4741	R:FXD COMP 470K OHMS 10% 1/2W	
R313	0836-0005	R:FXD DEPC 33 MEGOHM 10% 1W	
R314	0687-2731	R:FXD COMP 27K OHMS 10% 1/2W	
R315 THRU			
R316		NOT ASSIGNED	
R317	2100-0382	R:VAR COMP 500K OHM 30% LIN 1/4W	
R318	0836-0006	R:FXD DEPC 20 MEGOHM 10% 1W	
R319	2100-0218	R:VAR COMP 1.2 MEGOHM 20% LIN 2W INTENSITY	
R320	0689-6235	R:FXD COMP 62K OHMS 5% 1W	
R321	0761-0018	R:FXD MET FLM 47K OHM 5% 1W	
R322		NOT ASSIGNED	
R323	0687-1011	R:FXD COMP 100 OHM 10% 1/2W	
R324	0687-3341	R:FXD COMP 330K OHM 10% 1/2W	
R325	0692-6235	R:FXD COMP 62K OHMS 5% 2W	
R326	0687-5601	R:FXD COMP 56 OHMS 10% 1/2W	
R327	0690-1241	R:FXD COMP 120K OHMS 10% 1W	
R328		N.S.R. PART OF A304	
R329	0692-3955	R:FXD COMP 3.9 MEGOHM 5% 2W	
R330	0687-5601	R:FXD COMP 56 OHMS 10% 1/2W	
R331	0692-3955	R:FXD COMP 3.9 MEGOHM 5% 2W	
R332	0692-3955	R:FXD COMP 3.9 MEGOHM 5% 2W	
R333	0692-3955	R:FXD COMP 3.9 MEGOHM 5% 2W	

See list of abbreviations in introduction to this section

Table 6-1. Reference Designation Index (Cont'd)

Reference Designation	Stock No.	Description #	Note
R334	2100-0112	R:VAR COMP 5 MEGOHM 30% 1/2W (FOCUS)	
R335	0687-5611	R:FXD COMP 560 OHMS 10% 1/2W	
R336	0692-3955	R:FXD COMP 3.9 MEGOHM 5% 2W	
R337	0692-3955	R:FXD COMP 3.9 MEGOHM 5% 2W	
R338	0687-2731	R:FXD COMP 27K OHMS 10% 1/2W	
R339		NOT ASSIGNED	
R340	2100-0827	R:VAR COMP 100K OHM 20% LIN 2W ASTIGMATISM	
R341		NOT ASSIGNED	
R342	0687-2241	R:FXD COMP 220K OHMS 10% 1/2W	
R343	0686-5135	R:FXD COMP 51K OHMS 5% 1/2W	
R344	0686-3335	R:FXD COMP 33K OHMS 5% 1/2W	
R345		NSR PART OF A303	
R346	0686-4335	R:FXD COMP 43K OHMS 5% 1/2W	
R347	0689-1135	R:FXD COMP 11K OHMS 5% 1W	
R348	0693-2231	R:FXD COMP 22K OHMS 10% 2W	
R349	0687-2251	R:FXD COMP 2.2MEGOHMS 10% 1/2W	
R350	2100-0060	R:VAR COMP 20K OHM 20% LIN 2W	
R351	0693-1031	R:FXD COMP 10K OHMS 10% 2W	
R352	0693-1031	R:FXD COMP 10K OHMS 10% 2W	
R353		NOT ASSIGNED	
R354	0684-1021	R:FXD COMP 1K OHM 10% 1/4W	
R355	0687-1011	R:FXD COMP 100 OHM 10% 1/2W	
R356	0687-1011	R:FXD COMP 100 OHM 10% 1/2W	
R357 THRU R359		NOT ASSIGNED	
R360	0687-1551	R:FXD COMP 1.5MEGOHMS 10% 1/2W	
R361	0687-2231	R:FXD COMP 22K OHMS 10% 1/2W	
R362	0687-2731	R:FXD COMP 27K OHMS 10% 1/2W	
R363	0687-1041	R:FXD COMP 100K OHM 10% 1/2W	
R364 THRU R368		NOT ASSIGNED	
R369	0758-0054	R:FXD MET FLM 330 OHM 5% 1/2W	
R370	0686-1525	R:FXD COMP 1500 OHMS 5% 1/2W	
R371	0686-6235	R:FXD COMP 62K OHMS 5% 1/2W	
R372	0686-2735	R:FXD COMP 27K OHM 5% 1/2W	
R373	0686-4335	R:FXD COMP 43K OHMS 5% 1/2W	
R374	0686-1035	R:FXD COMP 10K OHMS 5%1/2W	
R375		N.S.R. PART OF A304	
R376	0727-0394	R:FXD DEPC 499 OHM 1/2% 1/2W	
R377	0727-0393	R:FXD DEPC 4.491K OHM 1/2% 1/2W	
R378	0730-0032	R:FXD DEPC 12.3K OHM 1% 1W	
R379 THRU R400		NOT ASSIGNED	
R401	0687-1831	R:FXD COMP 18K OHM 1% 1/2W	
R402 THRU R420		NOT ASSIGNED	
R421	0693-1041	R:FXD COMP 100K OHMS 10% 2W	
R422	0816-0015	R:FXD WW 50 OHMS 10% 10W	

See list of abbreviations in introduction to this section

Table 6-1. Reference Designation Index (Cont'd)

Reference Designation	Stock No.	Description #	Note
R423	0813-0011	R:FXD WW 330 OHM 5% 5W	
R424	0813-0011	R:FXD WW 330 OHM 5% 5W	
R425	0813-0011	R:FXD WW 330 OHM 5% 5W	
R426	0767-0004	R:FXD MET FLM 5K OHM 5% 3W	
R427	0693-5631	R:FXD COMP 56K OHMS 10% 2W	
R428	0687-1011	R:FXD COMP 100 OHMS 10% 1/2W	
R429	0687-3311	R:FXD COMP 330 OHMS 10% 1/2W	
R430	0687-8231	R:FXD COMP 82K OHMS 10% 1/2W	
R431	0687-3311	R:FXD COMP 330 OHMS 10% 1/2W	
R432	0730-0064	R:FXD DEPC 90K OHM 1% 1W	
R433		N.S.R. PART OF A402	
R434	0730-0058	R:FXD DEPC 75K OHMS 1% 1W	
R435 THRU			
R440		NOT ASSIGNED	
R441	0693-3331	R:FXD COMP 33K OHMS 10% 2W	
R442	0816-0010	R:FXD WW 12 OHMS 10% 10W	
R443	0816-0020	R:FXD WW 110 OHMS 10% 10W	
R444	0816-0020	R:FXD WW 110 OHMS 10% 10W	
R445	0690-1831	R:FXD COMP 18K OHMS 10% 1W	
R446	0687-1011	R:FXD COMP 100 OHMS 10% 1/2W	
R447	0687-4711	R:FXD COMP 470 OHM 10% 1/2W	
R448	0687-8231	R:FXD COMP 82K OHMS 10% 1/2W	
R449	0687-3311	R:FXD COMP 330 OHMS 10% 1/2W	
R450	0767-0024	R:FXD MET FLM 13K OHMS 5% 3W	
R451		N.S.R. PART OF A402	
R452	0767-0009	R:FXD MET FLM 12K OHM 5% 3W	
R453 THRU			
R460		NOT ASSIGNED	
R461	0693-3331	R:FXD COMP 33K OHMS 10% 2W	
R462	0816-0010	R:FXD WW 12 OHMS 10% 10W	
R463	0818-0033	R:FXD WW 250 OHMS 5% 20W	
R464	0693-1801	R:FXD COMP 18 OHMS 10% 2W	
R465	0690-1831	R:FXD COMP 18K OHMS 10% 1W	
R466	0727-0137	R:FXD DEPC 5.18K OHMS 1% 1/2W	
R467	0687-2711	R:FXD COMP 270 OHMS +/-10% 1/2W	
R468	0693-1821	R:FXD COMP 1800 OHMS 10% 2W	
R469	0687-4721	R:FXD COMP 4700 OHMS 10% 1/2W	
R470	0687-3331	R:FXD COMP 33K OHMS 10% 1/2W	
R471	0727-0095	R:FXD DEPC 900 OHM 1% 1/2W	
R472		N.S.R. PART OF A402	
R473	0767-0008	R:FXD MET FLM 10K OHMS 5% 3W	
R474 THRU			
R480		NOT ASSIGNED	
R481	0693-3311	R:FXD COMP 330 OHMS 10% 2W	
R482	0818-0034	R:FXD WW 2.3 OHMS 5% 45W	
R483	0687-1221	R:FXD COMP 1200 OHM 10% 1/2W	
R484	0690-2231	R:FXD COMP 22K OHMS 10% 1W	
R485	0687-1511	R:FXD COMP 150 OHMS 10% 1/2W	
R486	2100-0108	R:VAR COMP,LIN 100 OHMS 30% 1/3W	
R487	0687-1511	R:FXD COMP 150 OHMS 10% 1/2W	
R488 THRU			
R710		NOT ASSIGNED	

See list of abbreviations in introduction to this section

Table 6-1. Reference Designation Index (Cont'd)

Reference Designation	Stock No.	Description #	Note
R711	0686-6835	R:FXD COMP 68K OHMS 5% 1/2W	
R712	0686-6835	R:FXD COMP 68K OHMS 5% 1/2W	
R713	0686-4725	R:FXD COMP 4700 OHMS 5% 1/2W	
R714	0686-4725	R:FXD COMP 4700 OHMS 5% 1/2W	
R715	0687-1021	R:FXD COMP 1000 OHMS 10% 1/2W	
R716	0687-1021	R:FXD COMP 1000 OHMS 10% 1/2W	
R717	0687-5601	R:FXD COMP 56 OHMS 10% 1/2W	
R718 THRU			
R1000		NOT ASSIGNED	
R1001	0686-3645	R:FXD COMP 360K OHMS 5% 1/2W	
R1002		NSR - PART OF A1003	
R1003		NSR - PART OF A1003	
R1004		NSR - PART OF A1003	
R1005		NSR - PART OF A1003	
R1006	0686-1245	R:FXD COMP 120K OHMS 5%1/2W	
R1007	0686-9135	R:FXD COMP 91K OHMS 5% 1/2W	
R1008	0686-6835	R:FXD COMP 68K OHMS 5% 1/2W	
R1009	2100-0107	R:VAR COMP 50K OHM 30% 1/3W	
R1010	0687-1831	R:FXD COMP 18K OHMS 10% 1/2W	
R1011	0733-0009	R:FXD DEPC 36 MEGOHM 1% 2W	
R1012	0730-0138	R:FXD DEPC 9 MEGOHM 1% 1W	
R1013	0730-0138	R:FXD DEPC 9 MEGOHM 1% 1W	
R1014	0730-0162	R:FXD DEPC 4.54 MEGOHM 1% 1W	
R1015	0727-0391	R:FXD DEPC 1.81 MEGOHM 1% 1/2W	
R1016	0727-0261	R:FXD DEPC 900K OHMS 1% 1/2W	
R1017	0727-0392	R:FXD DEPC 450K OHM 1% 1/2W	
R1018	0727-0218	R:FXD DEPC 180K OHM 1% 1/2W	
R1019	0727-0204	R:FXD DEPC 90K OHM 1% 1/2W	
R1020	0686-6815	R:FXD COMP 680 OHMS 5% 1/2W	
RT401	0839-0006	THERMISTOR: 10 OHM 10% AT 25C	
S1	3101-0048	SWITCH:PUSHBOTTON MOMENTARY ACTION	
S1		BEAM FINDER	
S2 THRU			
S100		NOT ASSIGNED	
S101		N.S.R. PART OF A102	
S102	3100-0345	SWITCH:ROTARY 1 SECT 2 POS	
S103		PRESET SWITCH:NSR PART OF R172	
S104 THRU			
S200		NOT ASSIGNED	
S201		CAL SWITCH:NSR PART OF R214	
S202		N.S.R. PART OF A202	
S203 THRU			
S301		NOT ASSIGNED	
S302	3101-0011	SWITCH:SLIDE DPDT 0.5 AMP 125 VDCW INTERNAL-EXTERNAL	
S303 THRU			
S400		NOT ASSIGNED	
S401	3101-0050	SWITCH:TOG 3PDT NO	

See list of abbreviations in introduction to this section

Table 6-1. Reference Designation Index (Cont'd)

Reference Designation	Stock No.	Description #	Note
S402	3101-0033	SWITCH:SLIDE	
S402		115-230V	
S403	3103-0006	SWITCH:THERMAL SPDT	
S404 THRU			
S1001		NOT ASSIGNED	
S1002		N.S.R. PART OF R1009	
T103	175A-60A	TRANSFORMER:PULSE	
T104 THRU			
T300		NOT ASSIGNED	
T301	175A-11B	ASSY:HV TRANSFORMER	
T302 THRU			
T400		NOT ASSIGNED	
T401	9100-0162	TRANSFORMER POWER	
V1	1932-0022	ELECTRON TUBE:DUAL TRIODE 6DJ8	
V2	1932-0022	ELECTRON TUBE:DUAL TRIODE 6DJ8	
V3	1932-0022	ELECTRON TUBE: DUAL TRIODE 6DJ8	
V4	1932-0022	ELECTRON TUBE: DUAL TRIODE 6DJ8	
V5	2140-0008	LAMP:NEON NE-2	
V6	2140-0008	LAMP:NEON NE-2	
V7	1932-0022	ELECTRON TUBE: DUAL TRIODE 6DJ8	
V8	1932-0022	ELECTRON TUBE: DUAL TRIODE 6DJ8	
V9	1932-0022	ELECTRON TUBE: DUAL TRIODE 6DJ8	
V10	1932-0022	ELECTRON TUBE: DUAL TRIODE 6DJ8	
V11	1932-0022	ELECTRON TUBE: DUAL TRIODE 6DJ8	
V12	1932-0022	ELECTRON TUBE: DUAL TRIODE 6DJ8	
V13	2140-0008	LAMP:NEON NE2	
V14	2140-0008	LAMP:NEON NE2	
V15	2140-0008	LAMP:NEON NE-2	
V16	2140-0008	LAMP-NEON NE-2	
V17 THRU			
V100		NOT ASSIGNED	
V101	1932-0022	ELECTRON TUBE: DUAL TRIODE 6DJ8	
V102	2140-0008	LAMP:NEON NE2	
V103	1932-0022	ELECTRON TUBE: DUAL TRIODE 6DJ8	
V104	1932-0022	ELECTRON TUBE: DUAL TRIODE 6DJ8	
V105	1932-0022	ELECTRON TUBE: DUAL TRIODE 6DJ8	
V106	1923-0030	ELECTRON TUBE:RCA 6CL6	
V107	1932-0022	ELECTRON TUBE: DUAL TRIODE 6DJ8	
V108	2140-0008	LAMP:NEON NE2	
V109	1932-0022	ELECTRON TUBE: DUAL TRIODE 6DJ8	
V110	2140-0008	LAMP:NEON NE-2	
V111 THRU			
V200		NOT ASSIGNED	
V201	1932-0022	ELECTRON TUBE: DUAL TRIODE 6DJ8	
V202	2140-0008	LAMP:NEON NE2	
V203	1932-0022	ELECTRON TUBE: DUAL TRIODE 6DJ8	
V204	1921-0018	ELECTRON TUBE: TRIODE 6CM4	
V205	1921-0018	ELECTRON TUBE: TRIODE 6CM4	
V206	2140-0008	LAMP:NEON NE2	

 # See list of abbreviations in introduction to this section

Table 6-1. Reference Designation Index (Cont'd)

Reference Designation	Stock No.	Description #	Note
V207	2140-0008	LAMP:NEON NE2	
V208	1932-0022	ELECTRON TUBE: DUAL TRIODE 6DJ8	
V209	1932-0022	ELECTRON TUBE: DUAL TRIODE 6DJ8	
V210	2140-0008	LAMP:NEON NE 2	
V211	2140-0008	LAMP:NEON NE-2	
V212 THRU			
V300		NOT ASSIGNED	
V301	1923-0044	ELECTRON TUBE: 6CW5 (EL 86) PENTODE	
V302	1920-0004	ELECTRON TUBE: 1X2B DIODE	
V303	1920-0004	ELECTRON TUBE: 1X2B DIODE	
V304	1920-0004	ELECTRON TUBE: 1X2B DIODE	
V305	1920-0004	ELECTRON TUBE: 1X2B DIODE	
V306	1932-0029	ELECTRON TUBE: 12AU7 DUAL TRIODE	
V307	2140-0008	LAMP:NEON NE2	
V308	2140-0008	LAMP:NEON NE2	
V309	5083-0552	ELECTRON TUBE:CRT P31 IG	
V310 THRU			
V460		NOT ASSIGNED	
V461	1940-0001	TUBE:ELECTRON 5651	
W401	8120-0078	CABLE:POWER	
XV1	1200-0058	SOCKET-TUBE	
XV2	1200-0058	SOCKET-TUBE	
XV3	1200-0058	SOCKET-TUBE	
XV4	1200-0058	SOCKET-TUBE	
XV5 THRU			
XV6		NOT ASSIGNED	
XV7	1200-0058	SOCKET-TUBE	
XV8	1200-0058	SOCKET-TUBE	
XV9	1200-0058	SOCKET-TUBE	
XV10	1200-0058	SOCKET-TUBE	
XV11	1200-0058	SOCKET-TUBE	
XV12	1200-0058	SOCKET-TUBE	
XV13 THRU			
XV100		NOT ASSIGNED	
XV101	1200-0048	SOCKET:TUBE 9 PIN MINIATURE	
XV102		NOT ASSIGNED	
XV103	1200-0048	SOCKET:TUBE 9 PIN MINIATURE	
XV104	1200-0048	SOCKET:TUBE 9 PIN MINIATURE	
XV105	1200-0048	SOCKET:TUBE 9 PIN MINIATURE	
XV106	1200-0048	SOCKET:TUBE 9 PIN MINIATURE	
XV107	1200-0048	SOCKET:TUBE 9 PIN MINIATURE	
XV108		NOT ASSIGNED	
XV109	1200-0048	SOCKET:TUBE 9 PIN MINIATURE	
XV110 THRU			
XV200		NOT ASSIGNED	
XV201	1200-0062	SOCKET:TUBE 9 PIN MINIATURE	
XV202		NOT ASSIGNED	
XV203	1200-0062	SOCKET:TUBE 9 PIN MINIATURE	
XV204	1200-0062	SOCKET:TUBE 9 PIN MINIATURE	
XV205	1200-0062	SOCKET:TUBE 9 PIN MINIATURE	

See list of abbreviations in introduction to this section

Table 6-1. Reference Designation Index (Cont'd)

Reference Designation	Stock No.	Description #	Note
XV206 THRU			
XV207		NOT ASSIGNED	
XV208	1200-0062	SOCKET:TUBE 9 PIN MINIATURE	
XV209	1200-0062	SOCKET:TUBE 9 PIN MINIATURE	
XV210 THRU			
XV300		NOT ASSIGNED	
XV301	1200-0058	SOCKET:TUBE	
XV302	1200-0097	SOCKET:TUBE 9PIN	
XV303	1200-0097	SOCKET:TUBE 9-PIN	
XV304	1200-0097	SOCKET:TUBE 9-PIN	
XV305	1200-0097	SOCKET:TUBE 9-PIN	
XV306	1200-0058	SOCKET:TUBE	
XV307 THRU			
XV308		NOT ASSIGNED	
XV309	1200-0037	SOCKET:CRT TUBE	
XV310 THRU			
XV460		NOT ASSIGNED	
XV461	1200-0053	SOCKET:TUBE 7-PIN MINIATURE	
Z1	175A-60G	COIL: FXD RF	
Z2	175A-60G	COIL: FXD RF	
Z3	175A-60D	COIL:FXD RF	
Z4	175A-60D	COIL:FXD RF	
Z5 THRU			
Z6		NOT ASSIGNED	
Z7	175A-60E	COIL: FXD RF	
Z8	175A-60E	COIL: FXD RF	
Z9 THRU			
Z10		NOT ASSIGNED	
Z11	175A-60E	COIL: FXD RF	
Z12	175A-60E	COIL: FXD RF	
Z13	175A-60E	COIL: FXD RF	
Z14	175A-60E	COIL: FXD RF	
		MISCELLANEOUS	
	120A-20A	BEZEL	
	160A-83A	HOUSING:FAN	
	160A-110B	PIN:PLUG-IN GUIDE	
	175A-2D	PANEL:FRONT	
	175A-2C	PANEL: REAR	
	175A-6C	SHIELD:HV	
	175A-6D	SHIELD:VERTICAL	
	175A-12A	BRACKET:HORIZONAL PLUG-IN	
	175A-12B	BRACKET:VERTICAL PLUG-IN	
	175A-12F	BRACKET:FUSE	
	175A-12H	BRACKET:MOTOR SUPPORT	
	175A-16E	ASSY:DELAY LINE	
	175A-16W	CABLE:HV	
	175A-44B	COVER: BOTTOM	
	175A-44C	ASSY:TOP COVER	
	0370-0026	KNOB:FOCUS	
	0370-0026	KNOB:INTENSITY	

See list of abbreviations in introduction to this section

Table 6-1. Reference Designation Index (Cont'd)

Reference Designation	ⓗⓟ Stock No.	Description #	Note
	0370-0037	KNOB:SWEEP TIME	
	0370-0037	KNOB:HORIZONAL DISPLAY	
	0370-0061	KNOB: TRIGGER SLOPE	
	0370-0062	KNOB: HORIZONTAL POSITION,FINE ADJUST	
	0370-0062	KNOB: EXTERNAL VERNIER	
	0370-0062	KNOB: SWEEP TIME VERNIER	
	0370-0067	KNOB: TRIGGER LEVEL	
	0370-0089	KNOB: HORIZONTAL POSITION	
	0370-0113	KNOB: TRIGGER SOURCE	
	0370-0114	KNOB: SWEEP MODE	
	10003A	ASSY-PROBE	
	10003B	ASSY:PROBE	
	1220-0034	SHIELD:CRT	
	1400-0031	CLAMP:CABLE 3/8IN	
	1400-0084	FUSE:POST TYPE	
	1400-0093	CLAMP:CABLE	
	1400-0094	STRIP:FUSE MOUNTING	
	1490-0030	STAND:TILT	
	3150-0027	FILTER:AIR	
	3160-0019	BLADE:FAN	
	5000-0753	COVER:SIDE	
	5040-0404	CLIP:PROBE	
	5040-0418	INSULATOR:PCT	
	5060-0738	ASSY:SIDE FRAME	
	5060-0763	ASSY:SIDE HANDLE	
	5060-0765	RETAINER:HANDLE	
	5060-0767	FOOT ASSY:FULL MODULE	
	5060-0779	KIT:RACK MOUNT	
	7120-0171	LABEL:CRT SHIELD	

See list of abbreviations in introduction to this section

Table 6-2. Replaceable Parts

hp Stock No.	Description #	Mfr.	Mfr. Part No.	TQ	RS
120A-20A	BEZEL	28480	120A-20A	1	0
160A-83A	HOUSING:FAN	28480	160A-83A	1	0
160A-110B	PIN:PLUG-IN GUIDE	28480	160A-110B	1	0
175A-2C	PANEL: REAR	28480	175A-2C	1	0
175A-2D	PANEL:FRONT	28480	175A-2D	1	0
175A-6C	SHIELD:HV	28480	175A-6C	1	0
175A-6D	SHIELD:VERTICAL	28480	175A-6D	1	0
175A-11B	ASSY:HV TRANSFORMER	28480	175A-11B	1	1
175A-12A	BRACKET:HORIZONAL PLUG-IN	28480	175A-12A	1	0
175A-12B	BRACKET:VERTICAL PLUG-IN	28480	175A-12B	1	0
175A-12F	BRACKET:FUSE	28480	175A-12F	1	0
175A-12H	BRACKET:MOTOR SUPPORT	28480	175A-12H	1	0
175A-16E	ASSY:DELAY LINE	28480	175A-16E	1	0
175A-16W	CABLE:HV	28480	175A-16W	1	
175A-19C	ASSY: TRIGGER SELECTOR SWITCH	28480	175A-19C	1	
175A-19E	ASSY:SWEEP TIME SWITCH	28480	175A-19E	1	1
175A-19F	ASSY:HORIZONTAL DISPLAY SWITCH	28480	175A-19F	1	1
175A-19G	ASSY:SLOPE SWITCH	28480	175A-19G	1	1
175A-44B	COVER: BOTTOM	28480	175A-44B	1	0
175A-44C	ASSY:TOP COVER	28480	175A-44C	1	0
175A-60A	TRANSFORMER:PULSE	28480	175A-60A	1	1
175A-60D	COIL:FXD RF	28480	175A-60D	2	1
175A-60E	COIL: FXD RF	28480	175A-60E	6	2
175A-60F	COIL: VAR RF	28480	175A-60F	2	1
175A-60G	COIL: FXD RF	28480	175+-60G	2	1
175A-65H	ASSY: SWEEP TIME BOARD	28480	175A-65H	1	0
175A-65J	ASSY: GATE&SWEEP OUTPUT OPTION 08	28480	175A-65J	1	0
175A-65K	ASSY:HV SUPPLY	28480	175A-65K	1	0
175A-65L	ASSY:HV REGULATOR	28480	175A-65L	1	0
175A-65M	ASSY:HORIZONTAL AMPLIFIER	28480	175A-65M	1	0
175A-65P	ASSY:LV POWER SUPPLY	28480	175A-65P	1	0
175A-65R	ASSY:SWEEP	28480	175A-65R	1	0
175A-65S	ASSY:VERTICAL INPUT	28480	175A-65S	1	0
175A-65T	ASSY:VERTICAL OUTPUT	28480	175A-65T	1	0
10003A	ASSY-PROBE	28480	10003A	1	1
10003B	ASSY:PROBE	28480	10003B	1	0
0130-0001	C:VAR CER 7-45PF 500VDCW	72982	50300D2P0	6	2
0130-0003	C:FXD CER 1.5-7PF 500VDCW	72982	503-000 COPO 10R	1	1
0130-0006	C:VAR CER 5-20 PF 500VDCW	72982	B2P028R	2	1
0130-0008	C:VAR CER 8-50PF N750	28480	0130 0008	1	1
0130-0019	C:VAR CER 4-30 PF N 650	72982	STYLE 503-015-N650	1	1
0131-0004	C:VAR MICA 16-150 PF 175VDCW	28480	0131 0004	1	1
0132-0004	C:VAR POLY .7-3PF 350VDCW	72982	535-0009-4R	2	1
0140-0004	C:FXD MICA 15 PF 10% 500VDCW	00853	TYPE DR DR1415 B10	1	1
0140-0006	C:FXD MICA 82 PF 10% 500VDCW	76433	RCM15820K	2	1
0140-0016	C:FXD MICA 390 PF 5% 500VDCW	00853	TYPE KR KR1339 E5	1	1
0140-0018	C:FXD MICA 1000 PF 5% 500VDCW	00853	TYPE KR KR120 E5	1	1
0140-0025	C:FXD MICA 68 PF 10% 500 VDCW	76433	RCM15B680K	1	1
0140-0031	C:FXD MICA 220 PF 10% 500 VDCW	00853	TYPE K K1322 B10	1	1
0140 0034	C:FXD MICA 22 PF 5% 500 VDCW	76433	RCM15E220J	1	1

See list of abbreviations in introduction to this section

Table 6-2. Replaceable Parts (Cont'd)

hp Stock No.	Description #	Mfr.	Mfr. Part No.	TQ	RS
0140-0034	C:FXD MICA 22 PF 5% 500 VDCW	76433	RCM15E220J	1	1
0140-0039	C:FXD MICA 47PF 5% 300VDCW	28480	RCM15E470J	2	1
0140-0041	C:FXD MICA 100 PF 5% 500 VDCW	00853	TYPE DR DR1310E5	2	1
0140-0052	C:FXD MICA 33 PF 5% 300VDCW	76433	CM15C330J	1	1
0140-0054	C:FXD MICA 100 PF 10% 500 VDCW	00853	TYPE K1310 B10	1	1
0140-0055	C:FXD MICA 150 PF 10% 500VDCW	76433	RCM20B151K	1	1
0140-0081	C:FXD MICA 56PF +/-1PF	00853	DR1456E	1	1
0140-0082	C:FXD MICA 68 PF 5% 500 VDCW	00853	TYPE DR DR1468 E5	1	1
0140-0085	C:FXD MICA 470 PF 5% 500 VDCW	00853	TYPE KR KR1347 E5	1	1
0140-0092	C:FXD MICA 240 PF 5% 500 VDCW	00853	TYPE DR DR1324 E5	1	1
0140-0107	C:FXD MICA 507 PF 2% 500 VDCW	14655	CM15E5070G	1	1
0140-0201	C:FXD MICA 12 PF 5% 500VDCW	04062	DM15C120J	2	1
0150-0012	C:FXD CER 0.01UF 20% 1000VDCW	56289	H 1038	6	2
0150-0014	C:FXD CER 5000PF MIN 500VDCW	04222	D1 4	1	1
0150-0023	C:FXD CER 2000PF 20% 1000VDCW	91418	TYPE JF .002 20%	2	1
0150-0024	C:FXD CER 0.02 UF +80%-20% 600VDCW	71590	DD203	4	1
0150-0029	C:FXD TI 1PF 10% 500VDCW	78488	GA1.0PF	2	1
0150-0036	C:FXD CER 470 PF 20% 6KV	91418	#6KV470 20%	1	1
0150-0052	C:FXD CER 0.05UF 20% 400VDCW	05729	20X503MC4	24	5
0150-0064	C:FXD CER 15 PF 5% NPO 500VDCW	72982	301 011 COG0 150J	1	1
0150-0069	C:FXD CER 1000 PF 500VDCW	72982	801010X5	4	1
0150-0070	C:FXD CER .02UF 20% 500VDCW	72982	821010X	17	4
0150-0081	C:FXD CER .01UF -20% +80% 500VDCW	72982	CK63AW103X	13	3
0150-0084	C:FXD CER 0.1UF +80-20% 50VDCW	56289	33C41	2	1
0150-0085	C:FXD CER 2200 PF 20% 500 VDCW	56289	CK2AX222M	1	1
0150-0086	C:FXD CER 4700 PF 20% 500 VDCW	56289	CK2AW472M	2	1
0150-0088	C:FXD CER 3.9PF 500VDCW	72982	CC20CH3R9C	2	1
0160-0005	C:FXD MY 0.047UF 10% 600VDCW	56289	160P47396	1	1
0160-0010	C:FXD MY 4700PF 10% 600VDCW	56289	160P47296	1	1
0160-0013	C:FXD MY 0.1UF 10% 400VDCW	56289	160P10494	1	1
0160-0015	C:FXD PAPER 0.47UF 10% 200VDCW	56289	109P47492	1	1
0160-0127	C:FXD CER 1UF 20% 25VDCW	56289	5C13	1	1
0160-0151	C:FXD CER 4700PF +80%-20% 4000VDCW	71590	DA172-097CB	7	2
0160-0224	C:FXD CER 620PF 10,000VDCW	56289	706C1	1	1
0170-0017	C:FXD MY 0.01UF 5% 400VDCW	84411	TYPE 620S/ .01	1	1
0170-0018	C:FXD MY 1UF 5% 200VDCW	84411	HEW 4	1	1
0170-0019	C:FXD MY 0.1 UF 5% 200VDCW	28480	0170 0019	1	1
0170-0022	C:FXD MY 0.1UF 20% 600VDCW	09134	TYPE 27	3	1
0170-0027	C:FXD MY .02MF 5% 200VDCW	84411	TYPE 600UE	2	1
0170-0065	C:FXD MY 0.047UF 10% 140VDCW	56289	158P47391R4	1	1
0180-0024	C:FXD ELECT 40UF 450VDCW	56289	D32441	1	1
0180-0058	C:FXD ELECT 50UF -10%+100% 25VDCW	56289	TYPE 30D186A1	1	1
0180-0059	C:FXD ELECT 10 UF +100-10% 25VDCW	56289	30D106G025	3	1
0180-0089	C:FXD ELECT 10 UF 150VDCW	56289	30D218A1	2	1
0180-0131	C:FXD ELECT 150 PF +50-10% 200VDCW	00853	PLI	4	1
0180-0132	C:FXD ELECT 60 UF +100-10% 200VDCW	00853	PLI	2	1
0180-0133	C:FXD ELECT 135UF -10+50% 400VDCW	00853	PLI	1	1
0180-0134	C:FXD ELECT 7000UF -10+100% 25VDCW	56289	36D3070T	1	1
0180-0163	C:FXD ELECT 20 UF 450VDCW	56289	RS-154B	1	1
0370-0026	KNOB:FOCUS	28480	0370-0026	2	0
0370-0037	KNOB:SWEEP TIME	28480	0370-0037	2	0

See list of abbreviations in introduction to this section

Table 6-2. Replaceable Parts (Cont'd)

hp Stock No.	Description #	Mfr.	Mfr. Part No.	TQ	RS
0370-0061	KNOB: TRIGGER SLOPE	28480	0370-0061	1	0
0370-0062	KNOB: HORIZONTAL POSITION FINE ADJUST	28480	0370-0062	3	0
0370-0067	KNOB: TRIGGER LEVEL	28480	0370-0067	1	0
0370-0089	KNOB: HORIZONTAL POSITION	28480	0370-0089	1	0
0370-0113	KNOB: TRIGGER SOURCE	28480	0370-0113	1	0
0370-0114	KNOB: SWEEP MODE	28480	0370-0114	1	0
0683-1255	R:FXD COMP 1.2 MEGOHM 5% 1/4W	01121	CB 1255	1	1
0683-1515	R:FXD COMP 150 OHMS 5% 1/4W	01121	CB 1515	2	1
0683-2205	R:FXD COMP 22 OHM 5% 1/4W	01121	CB 2205	1	1
0683 2715	R:FXD COMP 270 OHMS 5% 1/4W	01121	CB 2715	2	1
0683-3315	R:FXD COMP 330 OHMS 5% 1/4W	01121	CB 3315	2	1
0683-3915	R:FXD COMP 390 OHMS 5% 1/4W	01121	CB 3915	2	1
0683-4305	R:FXD COMP 43 OHM 5% .25W	01121	CB4305	1	1
0683-6805	R:FXD COMP 68 OHMS 5% 1/4W	01121	CB 6805	2	1
0684-1021	R:FXD COMP 1K OHM 10% 1/4W	01121	CB 1021	1	1
0684-1051	R:FXD COMP 1 MEGOHM 10% 1/4W	01121	CB 1051	3	1
0684-2221	R:FXD COMP 2200 OHMS 10% 1/4W	01121	CB 2221	1	1
0684-4711	R:FXD COMP 470 OHMS 10% 1/4W	01121	CB 4711	1	1
0684-8211	R:FXD COMP 820 OHM 10% 1/4W	01121	CB 8211	2	1
0686-1035	R:FXD COMP 10K OHMS 5%1/2W	01121	EB-1035	1	1
0686-1245	R:FXD COMP 120K OHMS 5%1/2W	01121	EB-1245	2	1
0686-1515	R:FXD COMP 150 OHMS 5% 1/2W	01121	EB1515	2	1
0686-1525	R:FXD COMP 1500 OHMS 5% 1/2W	01121	EB 1525	1	1
0686-1535	R:FXD COMP 15K OHMS 5% 1/2W	01121	EB1535	1	1
0686-1555	R:FXD COMP 1.5MEGOHMS 5% 1/2W	01121	EB1555	1	1
0686-2035	R:FXD COMP 20K OHMS 5% 1/2W	01121	EB2035	2	1
0686-2205	R:FXD COMP 22 OHMS 5% 1/2W	01121	EB2205	1	1
0686-2735	R:FXD COMP 27K OHM 5% 1/2W	01121	EB 2735	1	1
0686-3335	R:FXD COMP 33K OHMS 5% 1/2W	01121	EB 3335	1	1
0686-3645	R:FXD COMP 360K OHMS 5% 1/2W	01121	EB 3645	1	1
0686-4335	R:FXD COMP 43K OHMS 5% 1/2W	01121	EB 4335	2	1
0686-4725	R:FXD COMP 4700 OHMS 5% 1/2W	01121	EB 4725	2	1
0686-4735	R:FXD COMP 47K OHM 5% 1/2W	01121	EB 4735	2	1
0686-5115	R:FXD COMP 510 OHMS 5% 1/2W	01121	EB 5115	1	1
0686-5135	R:FXD COMP 51K OHMS 5% 1/2W	01121	EB 5135	1	1
0686-6215	R:FXD COMP 620 OHMS 5% 1/2W	01121	EB 6215	1	1
0686-6235	R:FXD COMP 62K OHMS 5% 1/2W	01121	EB 6235	1	1
0686-6815	R:FXD COMP 680 OHMS 5% 1/2W	01121	EB 6815	1	1
0686-6825	R:FXD COMP 6800 OHMS 5% 1/2W	01121	EB 6825	1	1
0686-6835	R:FXD COMP 68K OHMS 5% 1/2W	01121	EB 6835	3	1
0686-7515	R:FXD COMP 750 OHMS 5% 1/2W	01121	EB 7515	1	1
0686-8225	R:FXD COMP 8200 OHMS 5% 1/2W	01121	EB 8225	1	1
0686-9135	R:FXD COMP 91K OHMS 5% 1/2W	01121	EB 9135	1	1
0687-1001	R:FXD COMP 10 OHM 10% 1/2W	01121	EB 1001	2	1
0687-1011	R:FXD COMP 100 OHMS 10% 1/2W	01121	EB 1011	9	2
0687-1021	R:FXD COMP 1000 OHMS 10% 1/2W	01121	EB 1021	4	1
0687-1031	R:FXD COMP 10K OHMS 10% 1/2W	01121	EB 1031	1	1
0687-1041	R:FXD COMP 100K OHM 10% 1/2W	01121	EB 1041	3	1
0687-1051	R:FXD COMP 1 MEGOHM 10% 1/2W	01121	EB 1051	5	2
0687-1221	R:FXD COMP 1200 OHM 10% 1/2W	01121	EB 1221	1	1

See list of abbreviations in introduction to this section

Table 6-2. Replaceable Parts (Cont'd)

hp Stock No.	Description #	Mfr.	Mfr. Part No.	TQ	RS
0687-1511	R:FXD COMP 150 OHMS 10% 1/2W	01121	EB 1511	4	1
0687-1551	R:FXD COMP 1.5MEGOHMS 10% 1/2W	01121	EB 1551	1	1
0687-1831	R:FXD COMP 18K OHMS 10% 1/2W	01121	EB 1831	3	1
0687-1841	R:FXD COMP 180K OHMS 10% 1/2W	01121	EB 1841	1	1
0687-2201	R:FXD COMP 22 OHMS 10% 1/2W	01121	EB 2201	1	1
0687-2211	R:FXD COMP 220 OHM 10% 1/2W	01121	EB 2211	4	1
0687-2231	R:FXD COMP 22K OHMS 10% 1/2W	01121	EB 2231	1	1
0687-2241	R:FXD COMP 220K OHMS 10% 1/2W	01121	EB 2241	1	1
0687-2251	R:FXD COMP 2.2MEGOHMS 10% 1/2W	01121	EB 2251	2	1
0687-2261	R:FXD COMP 22 MEGOHM 10% 1/2W	01121	EB 2261	1	1
0687-2701	R:FXD COMP 27 OHMS 10% 1/2W	01121	EB 2701	3	1
0687-2711	R:FXD COMP 270 OHMS +/-10% 1/2W	01121	EB2711	1	1
0687-2731	R:FXD COMP 27K OHMS 10% 1/2W	01121	EB 2731	3	1
0687-3311	R:FXD COMP 330 OHMS 10% 1/2W	01121	EB 3311	3	1
0687-3331	R:FXD COMP 33K OHMS 10% 1/2W	01121	EB 3331	2	1
0687-3341	R:FXD COMP 330K OHMS 10% 1/2W	01121	EB 3341	2	1
0687-3931	R:FXD COMP 39K OHMS 10% 1/2W	01121	EB 3931	1	1
0687-4711	R:FXD COMP 470 OHM 10% 1/2W	01121	EB 4711	1	1
0687-4721	R:FXD COMP 4700 OHMS 10% 1/2W	01121	EB4721	3	1
0687-4741	R:FXD COMP 470K OHMS 10% 1/2W	01121	EB 4741	3	1
0687-5601	R:FXD COMP 56 OHMS 10% 1/2W	01121	EB 5601	30	6
0687-5611	R:FXD COMP 560 OHMS 10% 1/2W	01121	EB 5611	3	1
0687-5621	R:FXD COMP 5600 OHMS 10% 1/2W	01121	EB 5621	2	1
0687-5631	R:FXD COMP 56K OHMS 10% 1/2W	01121	EB 5631	1	1
0687-8231	R:FXD COMP 82K OHMS 10% 1/2W	01121	EB 8231	3	1
0689-1135	R:FXD COMP 11K OHMS 5% 1W	01121	GB 1135	1	1
0689-2035	R:FXD COMP 20K OHM 5% 1W	01121	GB 2035	2	1
0690-1001	R:FXD COMP 10 OHMS 10% 1W	01121	GB 1001	1	1
0690-1031	R:FXD COMP 10K OHMS 10% 1W	01121	GB 1031	1	1
0690-1241	R:FXD COMP 120K OHMS 10% 1W	01121	GB 1241	1	1
0690-1531	R:FXD COMP 15K OHM 10% 1W	01121	GB 1531	1	1
0690-1831	R:FXD COMP 18K OHMS 10% 1W	01121	GB 1831	3	1
0690-2231	R:FXD COMP 22K OHMS 10% 1W	01121	GB 2231	1	1
0690-2731	R:FXD COMP 27K OHMS 10% 1W	01121	GB 2731	1	1
0690-5621	R:FXD COMP 5600 OHM 10% 1W	01121	GB 5621	1	1
0692-3955	R:FXD COMP 3.9 MEGOHM 5% 2W	01121	HB 3955	6	2
0692-6235	R:FXD COMP 62K OHMS 5% 2W	01121	HB 6235	1	1
0693-1031	R:FXD COMP 10K OHMS 10% 2W	01121	HB 1031	2	1
0693-1041	R:FXD COMP 100K OHMS 10% 2W	01121	HB 1041	1	1
0693-1231	R:FXD COMP 12K OHMS 10% 2W	01121	HB 1231	3	1
0693-1801	R:FXD COMP 18 OHMS 10% 2W	01121	HB 1801	1	1
0693-1821	R:FXD COMP 1800 OHMS 10% 2W	01121	HB 1821	1	1
0693-1831	R:FXD COMP 18K OHMS 10% 2W	01121	HB 1831	1	1
0693-2231	R:FXD COMP 22K OHMS 10% 2W	01121	HB 2231	1	1
0693-3311	R:FXD COMP 330 OHMS 10% 2W	01121	HB 3311	1	1
0693-3331	R:FXD COMP 33K OHMS 10% 2W	01121	HB 3331	2	1
0693-4731	R:FXD COMP 47K OHMS 10% 2W	01121	HB 4731	1	1
0693-5631	R:FXD COMP 56K OHMS 10% 2W	01121	HB 5631	1	1
0724-0038	R:FXD DEPC 71.5 OHM 1% 1/4W	19701	CF 1/4	1	1

See list of abbreviations in introduction to this section

Table 6-2. Replaceable Parts (Cont'd)

Stock No.	Description #	Mfr.	Mfr. Part No.	TQ	RS
0727-0095	R:FXD DEPC 900 OHM 1% 1/2W	19701	DC 1/2 CR5	1	1
0727-0110	R:FXD DEPC 1500 OHM 1% 1/2W	19701	DC1/2CR5	12	3
0727-0124	R:FXD DEPC 3000 OHMS 1% 1/2W	19701	DC1/2CR2	2	1
0727-0137	R:FXD DEPC 5.18K OHMS 1% 1/2W	19701	DC 1/2CR5	1	1
0727-0149	R:FXD DEPC 7.96K OHMS 1% 1/2W	19701	DC 1/2CR5	1	1
0727-0204	R:FXD DEPC 90K OHM 1% 1/2W	19701	CF 1/2	1	1
0727-0208	R:FXD DEPC 100K OHM 1% 1/2W	19701	DC 1/2CR5	2	1
0727-0212	R:FXD DEPC 111K OHM 1% 1/2W	19701	DC 1/2C R5	1	1
0727-0216	R:FXD DEPC 136.7K OHM 1% 1/2W	19701	DC1/2CR5	2	1
0727-0217	R:FXD DEPC 140K OHM 1% 1/2W	19701	DC 1/2B R5	1	1
0727-0218	R:FXD DEPC 180K OHM 1% 1/2W	19701	DC1/2CR5	2	1
0727-0224	R:FXD DEPC 249K OHM 1% 1/2W	19701	CF 1/2	1	1
0727-0233	R:FXD DEPC 333K OHM 1% 1/2W	19701	DC 1/2A R5	1	1
0727-0243	R:FXD DEPC 499K OHM 1% 1/2W	19701	CF 1/2	2	1
0727-0261	R:FXD DEPC 900K OHMS 1% 1/2W	19701	DC1/2CR5	2	1
0727-0281	R:FXD DEPC 1.39 MEGOHM 1% 1/2W	19701	DC 1/2A R5	1	1
0727-0287	R:FXD DEPC 2 MEGOHM 1% 1/2W	19701	DC 1/2C R5	1	1
0727-0307	R:FXD DEPC 1650 OHM 1% 1/2W	19701	CF 1/2	1	1
0727-0333	R:FXD DEPC 402K OHMS 1% 1/2W	19701	CF1/2	2	1
0727-0391	R:FXD DEPC 1.81 MEGOHM 1% 1/2W	19701	CF 1/2	1	1
0727-0392	R:FXD DEPC 450K OHM 1% 1/2W	19701	CF 1/2	1	1
0727-0393	R:FXD DEPC 4.491K OHM 1/2% 1/2W	19701	CF 1/2	1	1
0727-0394	R:FXD DEPC 499 OHM 1/2% 1/2W	19701	CF 1/2	1	1
0730-0032	R:FXD DEPC 12.3K OHM 1% 1W	19701	DCM R5	1	1
0730-0041	R:FXD DEPC 25.2K OHMS 1% 1W	19701	DC1 R5	1	1
0730-0058	R:FXD DEPC 75K OHMS 1% 1W	19701	DC1R5	1	1
0730-0064	R:FXD DEPC 90K OHM 1% 1W	19701	DC 1 R5	1	1
0730-0069	R:FXD DEPC 100K OHMS 1% 1W	19701	DC1R5	2	1
0730-0138	R:FXD DEPC 9 MEGOHM 1% 1W	19701	DC 1R5	2	1
0730-0153	R:FXD DEPC 17.4K OHMS 1% 1W	19701	DC1 R5	1	1
0730-0162	R:FXD DEPC 4.54 MEGOHM 1% 1W	19701	DC 1 R5	1	1
0733-0009	R:FXD DEPC 36 MEGOHM 1% 2W	19701	DC2 R5	1	1
0758-0054	R:FXD MET FLM 330 OHM 5% 1/2W	07115	C 20	1	1
0761-0010	R:FXD MET OX 1.8K OHM 5% 1W	07115	C32	2	1
0761-0018	R:FXD MET FLM 47K OHM 5% 1W	07115	C 32	1	1
0761-0022	R:FXD MET OX 620 OHM 5% 1W	07115	C32	1	1
0764-0001	R:FXD MET OX 6.2K OHM 5% 2W	07115	C42S	2	1
0764-0017	R:FXD MET OX 1.6K OHM 5% 2W	07115	C 42S	1	1
0764-0019	R:FXD MET FLM 3900 OHM 5% 2W	07115	C 42	1	1
0764-0020	R:FXD MET FLM 5600 OHM 5% 2W	07115	C 42	1	1
0764-0021	R:FXD MET FLM 9100 OHM 5% 2W	07115	C 42	1	1
0767-0004	R:FXD MET FLM 5K OHM 5% 3W	07115	LPI	2	1
0767-0005	R:FXD MET FLM 5.6K OHM 5% 3W	07115	LPI-3	2	1
0767-0006	R:FXD MET FLM 6.5K OHM 5% 3W	07115	LPI-3	4	1
0767-0008	R:FXD MET FLM 10K OHMS 5% 3W	07115	LPI 3	1	1
0767-0009	R:FXD MET FLM 12K OHM 5% 3W	07115	LPI-3	1	1
0767-0020	R:FXD MET FLM 2200 OHMS 5% 3W	07115	LPI 3	1	1
0767-0021	R:FXD MET FLM 2700 OHM 5% 3W	07115	LPI-3	3	1
0767-0022	R:FXD MET FLM 4500 OHMS 5% 3W	07115	LPI 3	1	1
0767-0024	R:FXD MET FLM 13K OHMS 5% 3W	07115	LPI 3	1	1
0773-0005	R:FXD MET FLM 12K OHMS 5% 5W	07115	LPI 5	1	1

See list of abbreviations in introduction to this section

Table 6-2. Replaceable Parts (Cont'd)

hp Stock No.	Description #	Mfr.	Mfr. Part No.	TQ	RS
0773-0006	R:FXD MET FLM 15K OHMS 5% 5W	07115	LPI 5	1	1
0773-0020	R:FXD MET FLM 2.7K OHM 5% 5W	07115	LPI-5	2	1
0776-0007	R:FXD MET FLM 16K OHM 5% 7W	07115	LP1 7	2	1
0813-0011	R:FXD WW 330 OHM 5% 5W	35434	TYPEC-5	3	1
0815-0011	R:FXD WW 630 OHM 5% 10W	94310	RW29V631	1	1
0815-0022	R:FXD WW 1600 OHM 5% 10W	94310	FR10	1	1
0816-0010	R:FXD WW 12 OHMS 10% 10W	35434	GC10-12A	2	1
0816-0015	R:FXD WW 50 OHMS 10% 10W	35434	GC10 50	1	1
0816-0020	R:FXD WW 110 OHMS 10% 10W	35434	C10-110	2	1
0818-0033	R:FXD WW 250 OHMS 5% 20W	94310	FR20	1	1
0818-0034	R:FXD WW 2.3 OHMS 5% 45W	35434	ROE45 2.3T5	1	1
0836-0005	R:FXD DEPC 33 MEGOHM 10% 1W	77764	BAKW	1	1
0836-0006	R:FXD DEPC 20 MEGOHM 10% 1W	77764	BAKW	1	1
0839-0006	THERMISTOR: 10 OHM 10% AT 25C	24446	D-754	1	1
1200-0037	SOCKET:CRT TUBE	72825	97094	1	1
1200-0048	SOCKET:TUBE 9 PIN MINIATURE	91662	390824	7	2
1200-0053	SOCKET:TUBE 7-PIN MINIATURE	71785	11151-11	1	1
1200-0058	SOCKET-TUBE	91662	3901PHSPTD	12	3
1200-0062	SOCKET:TUBE 9 PIN MINIATURE	71785	1215111060	6	2
1200-0097	SOCKET:TUBE 9PIN	95354	SMJ-799	4	1
1220-0034	SHIELD:CRT	28480	1220-0034	1	0
1250-0123	CONNECTOR:BNC UG-1094/U	91737	UG-1094/U	5	1
1251-0007	CONNECTOR:FEMALE 16-PIN	02660	264200-16S	1	1
1251-0137	RECEPTACLE 32 CONTACT	02660	264200 32S	1	1
1251-0148	CONNECTOR:POWER	60427	H-10611G-3L	1	1
1251-0228	HEAD BANANA JACK	83330	219-1 BLK	3	1
1251-0229	HEAD-BANANA-JACK	83330	2191- RED	3	1
1400-0031	CLAMP:CABLE 3/8IN	28480	1400-0031	1	0
1400-0084	FUSE:POST TYPE	75915	342014	1	0
1400-0093	CLAMP:CABLE	28480	1400-0093	1	0
1400-0094	STRIP:FUSE MOUNTING	28480	1400-0094	1	0
1450-0048	LIGHT:INDICATOR NE-2H	08717	858-R	1	1
1490-0030	STAND:TILT	28480	1490 0030	1	1
1850-0021	TRANSISTOR:GERMANIUM 2N441 PNP	16758	2N441	1	1
1850-0062	TRANSISTOR:GERMANIUM	28480	1850 0062	9	9
1850-0091	TRANSISTOR:GERMANIUM 2N2048 PNP	87216	2N2048	1	1
1850-0098	TRANSISTOR:GERMANIUM PNP	28480	1850-0098	7	7
1851-0017	TRANSISTOR:2N1304	28480	1851-0017	4	4
1901-0025	SEMICON DEVICE:DIODE	28180	1901-0025	1	1
1901-0032	SEMICON DEVICE:DIODE 1N3209JUNCTION	04713	1N3209	2	2
1901-0033	SEMICON DEVICE:DIODE 1N485B	07910	1N485B	1	1
1901-0034	SEMICON DEVICE:DIODE	28480	1901-0034	1	1
1901-0040	SEMICON DEVICE:DIODE	28480	1901-0040	1	1
1901-0044	SEMICON DEVICE:DIODE SILICON	28480	1901 0044	1	1
1901-0051	SEMICON DEVICE:DIODE SPL1N1566A	28480	1901-0051	13	13
1902-0017	SEMICON DEVICE:DIODE SI	28480	1902-0017	1	1
1902-0034	SEMICON DEVICE:DIODE	28480	1902 0034	3	3
1902-0064	SEMICON DEVICE:DIODE ZENER 1N755A	01281	1902-0064	1	1
1910-0016	SEMICON DEVICE:DIODE GERMANIUM	93332	D2361	5	5
1912-0006	SEMICON DEVICE:DIODE GER TUNNEL	28480	1912 0006	1	1

See list of abbreviations in introduction to this section

Table 6-2. Replaceable Parts (Cont'd)

hp Stock No.	Description #	Mfr.	Mfr. Part No.	TQ	RS
1920-0004	ELECTRON TUBE: 1X2B DIODE	86684	1X2B	4	4
1921-0018	ELECTRON TUBE: TRIODE 6CM4	73445	6CM4/EC86	2	2
1923-0030	ELECTRON TUBE:RCA 6CL6	86684	6CL6	1	1
1923-0044	ELECTRON TUBE: 6CW5 (EL 86) PENTODE	73445	EL 86/6CW5	1	1
1932-0022	ELECTRON TUBE:DUAL TRIODE 6DJ8	73445	6DJ8-ECC 88	20	20
1932-0029	ELECTRON TUBE: 12AU7 DUAL TRIODE	12859	12AU7	1	1
1940-0001	TUBE:ELECTRON 5651	86684	5651	1	1
2100-0060	R:VAR COMP 20K OHM 20% LIN 2W	28480	2100-0060	1	1
2100-0093	R:VAR COMP 20K OHM 20% LIN 1/5W	28480	2100-0093	1	1
2100-0094	R:VAR COMP 50K OHMS 30% LIN 1/5W	28480	2100 0094	1	1
2100-0107	R:VAR COMP 50K OHM 30% 1/3W	28480	2100-0107	1	1
2100-0108	R:VAR COMP,LIN 100 OHMS 30% 1/3W	11237	WPE70	1	1
2100-0112	R:VAR COMP 5 MEGOHM 30% 1/2W	28480	2100-0112	1	1
2100-0151	R:VAR 500 OHM 20% 2/10W LIN	28480	2100 0151	1	1
2100-0154	R:COMP 1000 OHM 30% LIN 3/10W	28480	2100 0154	1	1
2100-0218	R:VAR COMP 1.2 MEGOHM 20% LIN 2W	28480	2100-0218	1	1
2100-0234	R:VAR COMP 10K OHMS 20% LIN 2W	28480	2100 0234	1	1
2100-0344	R:VAR 2.5K,2.5K-12.5K OHMS	71590	2100-0344	1	1
2100-0345	R:VAR 12K,35K,100K-1K OHMS	71590	2100-0345	1	1
2100-0346	R:VAR COMP 10K OHM 20% LIN 1W	28480	2100 0346	1	1
2100-0347	R:VAR QUAD 4X25K OHM 30% 1/4W	28480	2100-0347	1	1
2100-0348	R:VAR COMP 50K OHM 20J LIN 1W	28480	2100-0348	1	0
2100-0382	R:VAR COMP 500K OHM 30% LIN 1/4W	28480	2100 0382	1	1
2100-0388	R:VAR WW 20 OHM 20% LIN 2W	28480	2100 0388	1	1
2100-0414	ASSY:HORIZONTAL POSITION	28480	2100-0414	1	1
2100-0444	R:VAR DUAL 1.2 MEGOHM, 600 OHM	28480	2100-0444	1	1
2100-0827	R:VAR COMP 100K OHM 20% LIN 2W	28480	2100-0827	1	1
2110-0012	FUSE,CARTRIDGE 1/2AMP 250V	75915	312500	1	10
2110-0023	FUSE:CARTRIDGE 6.25 AMP 250V SLOW BLOW	71400	MDF 6.25	1	10
2110-0029	FUSE: 3 AMP	75915	313003	1	10
2110-0033	FUSE: 0.75AMP 250V	79515	F02GR750A	2	20
2110-0035	FUSE:CARTRIDGE 8 AMP SLOW BLOW	71400	MDL 8	1	10
2140-0008	LAMP:NEON-NE-2	24455	NE-2	17	11
3100-0345	SWITCH:ROTARY 1 SECT 2 POS	28480	3100 0345	1	1
3101-0011	SWITCH:SLIDE DPDT 0.5 AMP 125 VDCW	42190	4603	1	1
3101-0033	SWITCH:SLIDE	28480	3101-0033	1	1
3101-0048	SWITCH PUSHBOTTON MOMENTARY ACTION	28480	3101 0048	1	1
3101-0050	SWITCH TOG 3PDT NO	88140	8906K1109	1	1
3103-0006	SWITCH:THERMAL SPDT	0000T	20400D52112	1	1
3140-0020	MOTOR:AC FOUR P 115 VAC 1700 RPM 1/300HP	83821	103 2453	1	1
3150-0027	FILTER:AIR	28480	3150-0027	1	1
3160-0019	BLADE:FAN	28480	3160-0019	1	1
5000-0753	COVER:SIDE	28480	5000-0753	2	0
5040-0404	CLIP:PROBE	28480	5040-0404	1	0
5040-0418	INSULATOR:POT	28480	5040-0418	1	0
5060-0410	COIL:ALIGNMENT	28480	5060-0410	1	1
5060-0738	ASSY:SIDE FRAME	28480	5060-0738	1	0
5060-0763	ASSY:SIDE HANDLE	28480	5060-0763	1	0

See list of abbreviations in introduction to this section

Table 6-2. Replaceable Parts (Cont'd)

hp Stock No.	Description #	Mfr.	Mfr. Part No.	TQ	RS
5060-0765	RETAINER:HANDLE	28480	5060-0765	1	O
5060-0767	FOOT ASSY:FULL MODULE	28480	5060-0767	1	O
5060-0779	KIT:RACK MOUNT	28480	5060-0779	1	O
5083-0552	ELECTRON TUBE:CRT P31 IG	28480	5083-0552	1	I
7120-0171	LABEL:CRT SHIELD	28480	7120-0171	1	O
8120-0078	CABLE:POWER	28480	8120-0078	1	1
8120-0092	DELAY LINE	28480	8120 0092	1	1
9100-0162	TRANSFORMER POWER	98734	9100-0162	1	1
9110-0050	CHOKE:FILTER 10MH	28480	9110-0050	1	1
9140-0018	COIL:FXD 1UH	28480	9140-0018	4	1
9140-0024	COIL:FXD 0.68 UH	28480	9140-0024	4	1
9140-0047	COIL:RF 20UH	99848	H51074020	2	1
9140-0074	COIL:FXD RF: 10UH	28480	9140 0074	1	1
9140-0080	COIL:RF. 0.18 MH 10%	95265	NB-0.18-P	4	1
9140-0088	COIL:RF .33UH	95265	NB-33P	5	1
9140-0094	COIL:FXD RF: 0.68UH	99800	1537-08	1	1
9140-0118	COIL:FXD 500 UH 5%	99800	2500-14	2	1
9140-0121	COIL:FXD 1.8 UH	28480	9140-0121	2	1

See list of abbreviations in introduction to this section

APPENDIX
CODE LIST OF MANUFACTURERS (Sheet 1 of 2)

The following code numbers are from the Federal Supply Code for Manufacturers Cataloging Handbooks H4-1 (Name to Code) and H4-2 (Code to Name) and their latest supplements. The date of revision and the date of the supplements used appear at the bottom of each page. Alphabetical codes have been arbitrarily assigned to suppliers not appearing in the H4 handbooks.

Code No.	Manufacturer	Address
00136	McCoy Electronics	Mount Holly Springs, Pa.
00334	Humidail Co.	Colton, Calif.
00335	Westrex Corp.	New York, N.Y.
00373	Garlock Packing Co., Electronic Products Div.	Camden, N.J.
00656	Aerovox Corp.	New Bedford, Mass.
00779	Amp, Inc.	Harrisburg, Pa.
00781	Aircraft Radio Corp.	Boonton, N.J.
00815	Northern Engineering Laboratories, Inc.	Burlington, Wis.
00853	Sangamo Electric Company, Ordill Division (Capacitors)	Marion, Ill.
00866	*Goe Engineering Co.*	Los Angeles, Calif.
00891	Carl E. Holmes Corp.	Los Angeles, Calif.
01121	Allen Bradley Co.	Milwaukee, Wis.
01255	Litton Industries, Inc.	Beverly Hills, Calif.
01281	Pacific Semiconductors, Inc.	Culver City, Calif.
01295	Texas Instruments, Inc. Transistor Products Div.	Dallas, Texas
01349	The Alliance Mfg. Co.	Alliance, Ohio
01561	Chassi-Trak Corp.	Indianapolis, Ind.
01589	Pacific Relays, Inc.	Van Nuys, Calif.
01930	Amerock Corp	Rockford, Ill.
01961	Pulse Engineering Co.	Santa Clara, Calif.
02114	Ferroxcube Corp. of America	Saugerties, N.Y.
02286	Cole Mfg. Co.	Palo Alto, Calif.
02660	Amphenol-Borg Electronics Corp.	Chicago, Ill.
02735	Radio Corp. of America, Semiconductor and Materials Div.	Somerville, N.J.
02771	Vocaline Co. of America, Inc.	Old Saybrook, Conn.
02777	Hopkins Engineering Co.	San Fernando, Calif.
03508	G.E. Semiconductor Products Dept.	Syracuse, N.Y.
03705	Apex Machine & Tool Co.	Dayton, Ohio
03797	Eldema Corp.	El Monte, Calif.
03877	Transitron Electronic Corp.	Wakefield, Mass.
03888	Pyrofilm Resistor Co.	Morristown, N.J.
03954	Air Marine Motors, Inc.	Los Angeles, Calif.
04009	Arrow, Hart and Hegeman Elect. Co.	Hartford, Conn.
04062	Elmenco Products Co.	New York, N.Y.
04222	Hi-Q Division of Aerovox	Myrtle Beach, S.C.
04298	Elgin National Watch Co., Electronics Division	Burbank, Calif.
04404	Dymec Division of Hewlett-Packard Co.	Palo Alto, Calif.
04651	Sylvania Electric Prods., Inc. Electronic Tube Div.	Mountain View, Calif.
04713	Motorola, Inc., Semiconductor Prod. Div.	Phoenix, Arizona
04732	Filtron Co., Inc., Western Div.	Culver City, Calif.
04773	Automatic Electric Co.	Northlake, Ill.
04777	Automatic Electric Sales Corp.	Northlake, Ill.
04796	Sequoia Wire & Cable Co.	Redwood City, Calif.
04870	P. M. Motor Company	Chicago 44, Ill.
05006	Twentieth Century Plastics, Inc.	Los Angeles, Calif.
05277	Westinghouse Electric Corp., Semi-Conductor Dept.	Youngwood, Pa.
05347	Ultronix, Inc.	San Mateo, Calif.
05593	Illumitronic Engineering Co.	Sunnyvale, Calif.
05624	*Barber Colman Co.*	Rockford, Ill.
05729	Metropolitan Telecommunications Corp., Metro Cap. Division	Brooklyn, N.Y.
05783	Stewart Engineering Co.	Santa Cruz, Calif.
06004	The Bassick Co.	Bridgeport, Conn.
06136	Ward Leonard Electric	Los Angeles, Calif.
06175	Bausch and Lomb Optical Co.	Rochester, N.Y.
06402	E.T.A. Products Co. of America	Chicago, Ill.
06555	Beede Electrical Instrument Co., Inc.	Penacook, N.H.
06751	U. S. Semcor Division of Nuclear Corp. of America	*Phoenix, Arizona*
06812	Torrington Mfg. Co., West Div.	Van Nuys, Calif.
07115	Corning Glass Works Electronic Components Dept.	Bradford, Pa.
07126	Digitran Co.	Pasadena, Calif.
07137	*Transistor Electronics Corp.*	Minneapolis, Minn.
07138	Westinghouse Electric Corp. Electronic Tube Div.	Elmira, N.Y.
07261	Avnet Corp.	Los Angeles, Calif.
07263	Fairchild Semiconductor Corp.	Mountain View, Calif.
07700	Technical Wire Products	Springfield, N.J.
07910	Continental Device Corp.	Hawthorne, Calif.
07933	Rheem Semiconductor Corp.	Mountain View, Calif.
07966	Shockley Semi-Conductor Laboratories	Palo Alto, Calif.
07980	Boonton Radio Corp.	Boonton, N.J.
08145	U.S. Engineering Co.	Los Angeles, Calif.
08358	Burgess Battery Co.	Niagara Falls, Ontario, Canada.
08717	Sloan Company	Burbank, Calif.
08718	Cannon Electric Co., Phoenix Div.	Phoenix, Ariz.
08792	CBS Electronics Semiconductor Operations, Div. of C.B.S., Inc.	*Lowell, Mass.*
08984	Mel-Rain	Indianapolis, Ind.
09026	Babcock Relays, Inc.	Costa Mesa, Calif.
09134	Texas Capacitor Co.	Houston, Texas
09250	Electro Assemblies, Inc.	Chicago, Ill.
09569	Mallory Battery Co. of Canada, Ltd.	Toronto, Ontario, Canada
09664	The Bristol Co.	Waterbury, Conn.
10214	General Transistor Western Corp.	Los Angeles, Calif.
10411	Ti-Tal, Inc.	Berkeley, Calif.
10646	Carborundum Co.	Niagara Falls, N.Y.
11236	CTS of Berne, Inc.	Berne, Ind.
11237	Chicago Telephone of California, Inc.	So. Pasadena, Calif.
11312	Microwave Electronics Corp.	Palo Alto, Calif.
11534	*Duncan Electronic, Inc.*	*Santa Ana, Calif.*
11711	General Instrument Corporation Semiconductor Division	Newark, N.J.
11717	Imperial Electronic, Inc.	Buena Park, Calif.
11870	Melabs, Inc.	Palo Alto, Calif.
12697	Clarostat Mfg. Co.	Dover, N.H.
12859	Nippon Electric Co., Ltd.	Tokyo, Japan
12930	Delta Semiconductor Inc.	Newport Beach, Calif.
13396	Telefunken (G.M.B.H.)	Hannover, Germany
14099	Sem-Tech	Newbury Park, Calif.
14193	Calif. Resistor Corp.	Santa Monica, Calif.
14298	American Components, Inc.	Conshohocken, Pa.
14655	Cornell Dubilier Elec. Corp.	So. Plainfield, N.J.
15909	The Daven Co.	Livingston, N.J.
16688	De Jur-Amsco Corporation	Long Island City 1, N.Y.
16758	*Delco Radio Div. of G.M. Corp.*	*Kokomo, Ind.*
18873	E.I. DuPont and Co., Inc.	Wilmington, Del.
19315	Eclipse Pioneer, Div. of Bendix Aviation Corp.	Teterboro, N.J.
19500	Thomas A. Edison Industries, Div. of McGraw-Edison Co.	West Orange, N.J.
19701	Electra Manufacturing Co.	Kansas City, Mo.
20183	Electronic Tube Corp.	Philadelphia, Pa.
21226	Executive, Inc.	New York, N.Y.
21520	Fansteel Metallurgical Corp.	No. Chicago, Ill.
21335	The Fafnir Bearing Co.	New Britain, Conn.
21964	Fed. Telephone and Radio Corp.	Clifton, N.J.
24446	General Electric Co.	Schenectady, N.Y.
24455	G.E., Lamp Division	Nela Park, Cleveland, Ohio
24655	General Radio Co.	West Concord, Mass.
26365	Gries Reproducer Corp.	New Rochelle, N.Y.
26462	*Grobet File Co. of America, Inc.*	*Carlstadt, N.J.*
26992	Hamilton Watch Co.	Lancaster, Pa.
28480	Hewlett-Packard Co.	Palo Alto, Calif.
33173	G.E. Receiving Tube Dept.	Owensboro, Ky.
35434	Lectrohm Inc.	Chicago, Ill.
37942	P.R. Mallory & Co., Inc.	Indianapolis, Ind.
39543	Mechanical Industries Prod. Co.	Akron, Ohio
40920	Miniature Precision Bearings, Inc.	Keene, N.H.
42190	Muter Co.	Chicago, Ill.
43990	C.A. Norgren Co.	Englewood, Colo.
44655	Ohmite Mfg. Co.	Skokie, Ill.
47904	Polaroid Corp.	Cambridge, Mass.
48620	Precision Thermometer and Inst. Co.	Philadelphia, Pa.
49956	Raytheon Company	Lexington, Mass.
52090	Rowan Controller Co.	Baltimore, Md.
54294	*Shallcross Mfg. Co.*	*Selma, N.C.*
55026	Simpson Electric Co.	Chicago, Ill.
55933	Sonotone Corp.	Elmsford, N.Y.
55938	Sorenson & Co., Inc.	So. Norwalk, Conn.
56137	Spaulding Fibre Co., Inc.	Tonawanda, N.Y.
56289	Sprague Electric Co.	North Adams, Mass.
59446	Telex, Inc.	St. Paul, Minn.
60741	Tripplett Electrical Inc.	Bluffton, Ohio
61775	Union Switch and Signal, Div. of Westinghouse Air Brake Co.	Swissvale, Pa.
62119	Universal Electric Co.	Owosso, Mich.
63743	Ward-Leonard Electric Co.	Mt. Vernon, N.Y.
64959	Western Electric Co., Inc.	New York, N.Y.
65092	Weston Inst. Div. of Daystrom, Inc.	Newark, N.J.
66295	Wittek Manufacturing Co.	Chicago 23, Ill.
66346	Wollensak Optical Co.	Rochester, N.Y.
70276	Allen Mfg. Co.	Hartford, Conn.
70309	Allied Control Co., Inc.	New York, N.Y.
70485	Atlantic India Rubber Works, Inc.	Chicago, Ill.
70563	Amperite Co., Inc.	New York, N.Y.
70903	Belden Mfg. Co.	Chicago, Ill.
70998	Bird Electronic Corp.	Cleveland, Ohio
71002	Birnbach Radio Co.	New York, N.Y.
71041	*Boston Gear Works Div. of* Murray Co. of Texas	Quincy, Mass.
71218	Bud Radio Inc.	Cleveland, Ohio
71286	Camloc Fastener Corp.	Paramus, N.J.
71313	Allen D. Cardwell Electronic Prod. Corp.	Plainville, Conn.
71400	Bussmann Fuse Div. of McGraw-Edison Co.	St. Louis, Mo.
71450	CTS Corp.	Elkhart, Ind.
71468	Cannon Electric Co.	Los Angeles, Calif.
71471	Cinema Engineering Co.	Burbank, Calif.
71482	C.P. Clare & Co.	Chicago, Ill.
71528	Standard-Thomson Corp., Clifford Mfg. Co. Div.	Waltham, Mass.
71590	Centralab Div. of Globe Union Inc.	Milwaukee, Wis.
71700	*The Cornish Wire Co.*	New York, N.Y.
71744	Chicago Miniature Lamp Works	Chicago, Ill.
71753	A.O. Smith Corp., Crowley Div.	West Orange, N.J.
71785	Cinch Mfg. Corp.	Chicago, Ill.
71984	Dow Corning Corp.	Midland, Mich.
72092	Eitel-McCullough, Inc.	San Bruno, Calif.
72136	Electro Motive Mfg. Co., Inc.	Willimantic, Conn.
71707	Coto Coil Co., Inc.	Providence, R.I.
72354	John E. Fast & Co.	Chicago, Ill.
72619	Dialight Corp.	Brooklyn, N.Y.
72656	General Ceramics Corp.	Keasbey, N.J.
72699	General Instrument Corp., Semiconductor Div.	Newark, N.J.
72758	Girard-Hopkins	Oakland, Calif.
72765	*Drake Mfg. Co.*	Chicago, Ill.
72825	Hugh H. Eby Inc.	Philadelphia, Pa.
72928	Gudeman Co.	Chicago, Ill.
72964	Robert M. Hadley Co.	Los Angeles, Calif.
72982	Erie Resistor Corp.	Erie, Pa.
73061	Hansen Mfg. Co., Inc.	Princeton, Ind.
73138	Helipot Div. of Beckman Instruments, Inc.	Fullerton, Calif.
73293	Hughes Products Division of Hughes Aircraft Co.	Newport Beach, Calif.
73445	Amperex Electronic Co., Div. of North American Phiflips Co, Inc.	*Hicksville, N.Y.*
73506	Bradley Semiconductor Corp.	Hamden, Conn.
73559	Carling Electric, Inc.	Hartford, Conn.
73682	George K. Garrett Co., Inc.	Philadelphia, Pa.
73734	Federal Screw Products Co.	Chicago, Ill.
73743	*Fischer Special Mfg. Co.*	*Cincinnati, Ohio*
73793	The General Industries Co.	Elyria, Ohio
73905	Jennings Radio Mfg. Co.	San Jose, Calif.
74455	J.H. Winns, and Sons	Winchester, Mass.
74861	Industrial Condenser Corp.	Chicago, Ill.
74868	R.F. Products Division of Amphenol-Borg Electronics Corp.	Danbury, Conn.
74970	E.F. Johnson Co.	Waseca, Minn.
75042	International Resistance Co.	Philadelphia, Pa.
75173	Jones, Howard B., Division of Cinch Mfg. Corp.	Chicago, Ill.
75378	James Knights Co.	Sandwich, Ill.
75382	Kulka Electric Corporation	Mt. Vernon, N.Y.
75818	Lenz Electric Mfg. Co.	Chicago, Ill.
75915	Littlefuse Inc.	Des Plaines, Ill.
76005	Lord Mfg. Co.	Erie, Pa.
76210	*C.W. Marwedel*	*San Francisco, Calif.*
76433	Micamold Electronic Mfg. Corp.	Brooklyn, N.Y.
76487	James Millen Mfg. Co., Inc.	Malden, Mass.
76493	J.W. Miller Co.	Los Angeles, Calif.
76530	Monadnock Mills	San Leandro, Calif.
76545	Mueller Electric Co.	Cleveland, Ohio.
76854	Oak Manufacturing Co.	Crystal Lake, Ill.
77068	Bendix Pacific Division of Bendix Corp.	No. Hollywood, Calif.
77221	Phaostran Instrument and Electronic Co.	South Pasadena, Calif.
77252	*Philadelphia Steel and Wire Corp.*	Philadelphia, Pa.
77342	Potter and Brumfield, Div. of American Machine and Foundry	Princeton, Ind.
77630	Radio Condenser Co.	Camden, N.J.
77638	Radio Receptor Co., Inc.	Brooklyn, N.Y.
77764	Resistance Products Co.	Harrisburg, Pa.
78189	Shakeproof Division of Illinois Tool Works	Elgin, Ill.
78283	Signal Indicator Corp.	New York, N.Y.
78290	Struthers-Dunn Inc.	Pitman, N.J.
78471	Tilley Mfg. Co.	San Francisco, Calif.
78488	*Stackpole Carbon Co.*	*St. Marys, Pa.*
78553	Tinnerman Products, Inc.	Cleveland, Ohio
78790	Transformer Engineers	Pasadena, Calif.
78947	Ucinite Co.	Newtonville, Mass.
79142	Veeder Root, Inc.	Hartford, Conn.
79251	Wenco Mfg. Co.	Chicago, Ill.
79727	Continental-Wirt Electronics Corp.	Philadelphia, Pa.
79963	Zierick Mfg. Corp.	New Rochelle, N.Y.
80031	Mepco Division of Sessions Clock Co.	Morristown, N.J.
80120	*Schnitzer Alloy Products*	*Elizabeth, N.J.*
80130	Times Facsimile Corp.	New York, N.Y.
80131	Electronic Industries Association. Any brand tube meeting EIA standards	Washington, D.C.
80207	Unimax Switch, Div. of W.L. Maxson Corp.	Wallingford, Conn.
80223	United Transformer Corp.	New York, N.Y.
80248	Oxford Electric Corp.	Chicago, Ill.
80294	Bourns Laboratories, Inc.	Riverside, Calif.
80411	Acro Div. of Robertshaw Fulton Controls Co.	Columbus 16, Ohio
80486	All Star Products Inc.	Defiance, Ohio
80583	Hammerlund Co., Inc.	New York, N.Y.
80640	Stevens, Arnold, Co., Inc.	Boston, Mass.
81030	International Instruments, Inc.	New Haven, Conn.
81073	Grayhill Co.	LaGrange, Ill.
81095	*Triad Transformer Corp.*	*Venice, Calif.*
81312	Winchester Electronics Co., Inc.	Norwalk, Conn.
81349	Military Specification	.....
81415	Wilkor Products, Inc.	Cleveland, Ohio
81453	Raytheon Mfg. Co., Industrial Components Div., Industr. Tube Operations	Newton, Mass.
81483	International Rectifier Corp.	El Segundo, Calif.
81541	The Airpax Products Co.	Cambridge, Mass.
81860	Barry Controls, Inc.	Watertown, Mass.
82042	Carter Parts Co.	Skokie, Ill.
82142	Jeffers Electronics Division of Speer Carbon Co.	Du Bois, Pa.
82170	Allen B. DuMont Labs, Inc.	Clifton, N.J.
82209	Maguire Industries, Inc.	Greenwich, Conn.
82219	Sylvania Electric Prod. Inc. Electronic Tube Div.	Emporium, Pa.
82376	*Astron Co.*	*East Newark, N.J.*
82389	Switchcraft, Inc.	Chicago, Ill.
82647	Metals and Controls, Inc., Div. of Texas Instruments, Inc., Spencer Prods.	Attleboro, Mass.
82866	Research Products Corp.	Madison, Wis.
82877	Rotron Manufacturing Co., Inc.	Woodstock, N.Y.
82893	Vector Electronic Co.	Glendale, Calif.
83053	Western Washer Mfr. Co.	Los Angeles, Calif.
83058	Carr Fastener Co.	Cambridge, Mass.
83086	New Hampshire Ball Bearing, Inc.	Peterborough, N.H.
83125	Pyramid Electric Co.	Darlington, S.C.
83148	Electro Cords Co.	Los Angeles, Calif.
83186	Victory Engineering Corp.	Union, N.J.
83298	Bendix Corp., Red Bank Div.	Red Bank, N.J.
83315	Hubbell Corp.	Mundelein, Ill.
83330	Smith, Herman H., Inc.	Brooklyn, N.Y.
83501	Gavitt Wire and Cable Co., Div. of Amerace Corp.	Brookfield, Mass.
83594	Burroughs Corp., Electronic Tube Div.	Plainfield, N.J.
83740	Eveready Battery	New York, N.Y.
83777	Model Eng. and Mfg., Inc.	Huntington, Ind.
83821	Loyd Scruggs Co.	Festus, Mo.
84171	Arco Electronis, Inc.	New York, N.Y.
84396	A.J. Glesener Co., Inc.	San Francisco, Calif.
84411	*Good All Electric Mfg. Co.*	*Ogallala, Neb.*
84970	Sarkes Tarzian, Inc.	Bloomington, Ind.
85454	Boonton Molding Company	Boonton, N.J.
85471	A.B. Boyd Co.	San Francisco, Calif.
85474	R.M. Bracamonte & Co.	San Francisco, Calif.
85660	Koiled Kords, Inc.	New Haven, Conn.
85911	Seamless Rubber Co.	Chicago, Ill.
86197	Clifton Precision Products	Clifton Heights, Pa.
86684	Radio Corp. of America, RCA Electron Tube Div.	Harrison, N.J.

Revised: Sept. 11, 1963
00015-33

From: F.S.C. Handbook Supplements
H4-1 Dated Supplement 22
H4-2 Dated April 1962

APPENDIX
CODE LIST OF MANUFACTURERS (Sheet 2 of 2)

Code No.	Manufacturer	Address
87216	Philco Corporation (Lansdale Division)	Lansdale, Pa.
87473	Western Fibrous Glass Products Co.	San Francisco, Calif.
87664	Van Waters & Rogers Inc.	Seattle, Wash.
88140	Cutler-Hammer, Inc.	Lincoln, Ill.
88220	Gould-National Batteries, Inc.	St. Paul, Minn.
89473	General Electric Distributing Corp.	Schenectady, N.Y.
89636	Carter Parts Div. of Economy Baler Co.	Chicago, Ill.
89665	United Transformer Co.	Chicago, Ill.
90179	U.S. Rubber Co., Mechanical Goods Div.	Passaic, N.J.
90970	Bearing Engineering Co.	San Francisco, Calif.
91260	Connor Spring Mfg. Co.	San Francisco, Calif.
91345	Miller Dial & Nameplate Co.	El Monte, Calif.
91418	Radio Materials Co.	Chicago, Ill.
91506	Augat Brothers', Inc.	Attleboro, Mass.
91637	Dale Electronics, Inc.	Columbus, Nebr.
91662	Elco Corp.	Philadelphia, Pa.
91737	Gemar Mfg. Co., Inc.	Wakefield, Mass.
91827	K F Development Co.	Redwood City, Calif.
91929	Minneapolis-Honeywell Regulator Co., Microswitch Div.	Freeport, Ill.
92196	Universal Metal Products, Inc.	Bassett Puente, Calif.
93332	Sylvania Electric Prod. Inc., Semiconductor Div.	Woburn, Mass.
93369	Robbins and Myers, Inc.	New York, N.Y.
93410	Stevens Mfg. Co., Inc.	Mansfield, Ohio
93983	Insuline-Van Norman Ind., Inc. Electronic Division	Manchester, N.H.
94144	Raytheon Mfg. Co., Industrial Components Div., Receiving Tube Operation	Quincy, Mass.
94145	Raytheon Mfg. Co., Semiconductor Div., California Street Plant	Newton, Mass.
94148	Scientific Radio Products, Inc.	Loveland, Colo.
94154	Tung-Sol Electric, Inc.	Newark, N.J.
94197	Curtiss-Wright Corp., Electronics Div.	East Paterson, N.J.
94310	Tru Ohm Prod. Div. of Model Engineering and Mfg. Co.	Chicago, Ill.
94682	Worcester Pressed Aluminum Corp.	Worcester, Mass.
95023	Philbrick Researchers, Inc.	Boston, Mass.
95236	Allies Products Corp.	Miami, Fla.
95238	Continental Connector Corp.	Woodside, N.Y.
95263	Leecraft Mfg. Co., Inc.	New York, N.Y.
95264	Lerco Electronics, Inc.	Burbank, Calif.
95265	National Coil Co.	Sheridan, Wyo.
95275	Vitramon, Inc.	Bridgeport, Conn.
95348	Gordas Corp.	Bloomfield, N.J.
95354	Methode Mfg. Co.	Chicago, Ill.
95987	Weckesser Co.	Chicago, Ill.
96067	Huggins Laboratories	Sunnyvale, Calif.
96095	Hi-Q Division of Aerovox	Olean, N.Y.
96256	Thordarson-Meissner Div. of Maguire Industries, Inc.	Mt. Carmel, Ill.
96296	Solar Manufacturing Co.	Los Angeles, Calif.
96330	Carlton Screw Co.	Chicago, Ill.
96341	Microwave Associates, Inc.	Burlington, Mass.
96501	Excel Transformer Co.	Oakland, Calif.
97464	Industrial Retaining Ring Co.	Irvington, N.J.
97539	Automatic and Precision Mfg. Co.	Yonkers, N.Y.
97966	CBS Electronics, Div. of C.B.S., Inc.	Danvers, Mass.
97979	Reon Resistor Corp.	Yonkers, N.Y.
98141	Axel Brothers Inc.	Jamaica, N.Y.
98220	Francis L. Mosley	Pasadena, Calif.
98278	Microdot, Inc.	So. Pasadena, Calif.
98291	Sealectro Corp.	Mamaroneck, N.Y.
98405	Carad Corp.	Redwood City, Calif.
98821	North Hills Electric Co.	Mineola, N.Y.
98925	Clevite Transistor Prod. Div. of Clevite Corp.	Waltham, Mass.
98978	International Electronic Research Corp.	Burbank, Calif.
99109	Columbia Technical Corp.	New York, N.Y.
99313	Varian Associates	Palo Alto, Calif.
99515	Marshall Industries, Electron Products Division	Pasadena, Calif.
99707	Control Switch Division, Controls Co. of America	El Segundo, Calif.
99800	Delevan Electronics Corp.	East Aurora, N.Y.
99848	Wilco Corporation	Indianapolis, Ind.
99934	Renbrandt, Inc.	Boston, Mass.
99942	Hoffman Semiconductor Div. of Hoffman Electronics Corp.	Evanston, Ill.
99957	Technology Instrument Corp of Calif.	Newbury Park, Calif.

THE FOLLOWING H-P VENDORS HAVE NO NUMBER ASSIGNED IN THE LATEST SUPPLEMENT TO THE FEDERAL SUPPLY CODE FOR MANUFACTURERS HANDBOOK.

Code No.	Manufacturer	Address
C0000	JFD Electronics Corp.	Van Nuys, Calif.
G0000	Tranex Company	Mountain View, Calif.
I0000	Western Devices, Inc.	Inglewood, Calif.
J0000	Winchester Electronics, Inc.	Santa Monica, Calif.
0000F	Malco Tool and Die	Los Angeles, Calif.
0000M	Western Coil Div. of Automatic Ind., Inc.	Redwood City, Calif.
0000N	Nahm-Bros. Spring Co.	San Leandro, Calif.
0000P	Ty-Car Mfg. Co., Inc.	Holliston, Mass.
0000T	Texas Instruments, Inc. Metals and Controls Div.	Versailles, Ky.
0000U	Tower Mfg. Corp.	Providence, R.I.
0000W	Webster Electronics Co. Inc.	New York, N.Y.
0000X	Spruce Pine Mica Co.	Spruce Pine, N.C.
0000Y	Midland Mfg. Co. Inc.	Kansas City, Kans.
0000Z	Willow Leather Products Corp.	Newark, N.J.
000AA	British Radio Electronics Ltd.	Washington, D.C.
000AB	ETA	England
000AC	Indiana General Corp., Elect. Div.	Indiana
000BB	Precision Instrument Components Co.	Van Nuys, Calif.
000CC	Computer Diode Corp.	Lodi, N.J.
000EE	A. Williams Manufacturing Co.	San Jose, Calif.
000GG	Goshen Die Cutting Service	Goshen, Ind.
000HH	Rubbercraft Corp.	Torrance, Calif.
000II	Birtcher Corporation, Industrial Division	Monterey Park, Calif.
000KK	Amatom	New Rochelle, N.Y.
000LL	Avery Label	Monrovia, Calif.
000MM	Rubber Eng. & Development	Hayward, Calif.
000NN	A "N" D Manufacturing Co.	San Jose 27, Calif.
000PP	Atohm Electronics	Sun Valley, Calif.
000QQ	Cooltron	Oakland, Calif.
000RR	Radio Industries	Des Plaines, Ill.
000SS	Control of Elgin Watch Co.	Burbank, Calif.
000TT	Thomas & Betts Co., The	Elizabeth 1, N.J.
000WW	California Eastern Lab.	Burlingame, Calif.
000XX	Methode Electronics, Inc.	Chicago 31, Ill.
000YY	S.K. Smith Co.	Los Angeles 45, Calif.

Revised: Sept. 11, 1963
00015-33

From: F.S.C. Handbook Supplements
H4-1 Dated Supplement 22
H4-2 Dated April 1962

CATHODE RAY TUBE WARRANTY

The cathode ray tube supplied in your Hewlett-Packard Oscilloscope and replacement cathode ray tubes purchased from hp, are guaranteed against electrical failure for one year from the date of sale by the Hewlett-Packard Company. Broken tubes or tubes with burned phosphor are not included in this guarantee.

Your local Hewlett-Packard representative maintains a stock of replacement tubes and will be glad to process your warranty claim for you. Please consult him.

Whenever a tube is returned for a warranty claim, the reverse side of this sheet must be filled out in full and returned with the tube. Follow shipping instructions carefully to insure safe arrival, since no credit can be allowed on broken tubes.

SHIPPING INSTRUCTIONS

1) Carefully wrap the tube in 1/4" thick cotton batting or other soft padding material.

2) Wrap the above in heavy kraft paper.

3) Pack in a rigid container which is at least 4 inches larger than the tube in each dimension.

4) Surround the tube with at least four inches of packed excelsior or similar shock absorbing material. Be certain that the packing is tight all around the tube.

5) Tubes returned from outside the continental United States should be packed in a wooden box.

6) Ship prepaid preferably by AIR FREIGHT or RAILWAY EXPRESS. We do not recommend parcel post or air parcel post shipment.

CRT WARRANTY CLAIM

FROM: DATE: _____

NAME: _____

COMPANY: _____

ADDRESS: _____

_____

_____

Person to contact for further information:

NAME: _____

TITLE: _____

COMPANY: _____

ADDRESS: _____

_____

_____

To process your claim quickly please enter the information indicated below:

1) hp INSTRUMENT MODEL _____ SERIAL _____

2) TUBE TYPE _____ SERIAL _____

3) ORIGINAL TUBE _____ REPLACEMENT TUBE _____

4) YOUR PURCHASE ORDER NO. _____

5) DATE PURCHASED _____

6) PURCHASED FROM _____

7) COMPLAINT: (Please describe nature of trouble) _____

_____

_____

_____

8) OPERATING CONDITIONS: (Please describe conditions prior to and at time of failure _____

_____

_____

_____

SIGNATURE _____

_____

HEWLETT-PACKARD SALES AND SERVICE OFFICES IN NORTH AMERICA

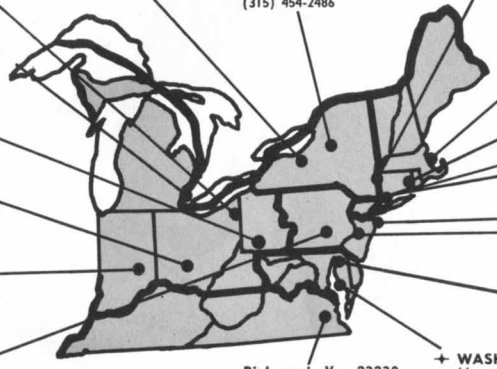

✦ **Cleveland, Ohio 44129**
Crossley Associates, Inc.
5579 Pearl Road
(216) 884-9209

✦ **Rochester, N. Y. 14625**
Syracuse Sales Division
Hewlett-Packard Company
800 Linden Avenue
(716) 381-4120

✦ **Syracuse, N. Y. 13211**
Syracuse Sales Division
Hewlett-Packard Company
Pickard Bldg.
Molloy Rd. and Pickard Dr.
(315) 454-2486

✦ **Poughkeepsie, N. Y. 12601**
Syracuse Sales Division
Hewlett-Packard Company
82 Washington St.
(914) 454-7330

✦ **BOSTON AREA**
Yewell Associates, Inc.
Middlesex Turnpike
Burlington, Mass. 01804
(617) 272-9000

✦ **Middletown, Conn. 06458**
Yewell Associates, Inc.
589 Saybrook Rd.
(203) 346-6611

✦ **Detroit, Mich. 48235**
Crossley Associates, Inc.
14425 West Eight Mile Road
(313) 342-5700

✦ **PITTSBURGH AREA**
Crossley Associates, Inc.
2545 Moss Side Blvd.
Monroeville, Pa. 15146
(412) 271-5227

✦ **Dayton, Ohio 45409**
Crossley Associates, Inc.
1250 W. Dorothy Lane
(513) 299-3594

✦ **Indianapolis, Ind. 46205**
Crossley Associates, Inc.
3919 Meadows Dr.
(317) 546-4891

Camp Hill, Pa. 17011
Robinson Sales Division
Hewlett-Packard Company
Park Place Office Bldg.
(717) 737-6791

Richmond, Va. 23230
Bivins & Caldwell, Inc.
2112 Spencer Road
(703) 282-5451

✦ **WASHINGTON, D. C. AREA**
Horman Associates, Inc.
941 Rollins Avenue
Rockville, Md. 20852
(301) 427-7560

✦ **New York, N. Y. 10021**
RMC Sales Division
Hewlett-Packard Company
236 East 75th Street
(212) 879-2023

Englewood, N. J. 07631
RMC Sales Division
Hewlett-Packard Company
391 Grand Avenue
(201) 567-3933

Asbury Park, N. J. 07712
Robinson Sales Division
Hewlett-Packard Company
1317 Railroad Avenue
(201) 531-3150

✦ **PHILADELPHIA AREA**
Robinson Sales Division
Hewlett-Packard Company
144 Elizabeth Street
West Conshohocken, Pa. 19428
(215) 248-1600 and 828-6200

Baltimore, Md. 21215
Horman Associates, Inc.
3006 West Cold Spring Lane
(301) 664-4400

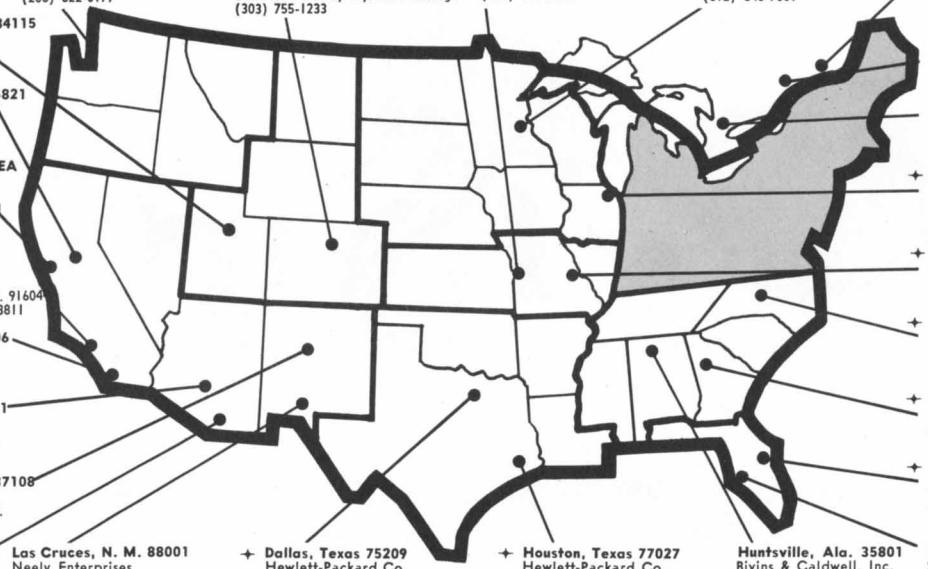

✦ **Seattle, Wash. 98109**
ARVA, Inc.
1320 Prospect Street
(206) 622-0177

✦ **Denver, Colo. 80222**
Lahana & Company
P.O. Box 22065
Belleview Valley Hy. Interchange
(303) 755-1233

Kansas City, Mo. 64131
Harris-Hanson Company
7916 Paseo Street
(816) 444-9494

✦ **St. Paul, Minn. 55114**
Crossley Associates, Inc.
842 Raymond Avenue
(612) 646-7881

✦ **Montreal, Quebec**
Hewlett-Packard (Canada) Ltd.
8270 Mayrand Street
(514) 735-2273

Salt Lake City, Utah 84115
Lahana & Co.
1482 Major St.
(801) 486-8166

✦ **Sacramento, Calif. 95821**
Neely Enterprises
2591 Carlsbad Ave.
(916) 482-1463

△ **SAN FRANCISCO AREA**
Neely Enterprises
501 Laurel Street
San Carlos, Calif. 94071
(415) 591-7661

✦ **LOS ANGELES AREA**
Neely Enterprises
3939 Lankershim Blvd.
North Hollywood, Calif. 91604
(213) 877-1282 and 766-3811

✦ **San Diego, Calif. 92106**
Neely Enterprises
1055 Shafter Street
(714) 223-8103

✦ **Scottsdale, Ariz. 85251**
Neely Enterprises
3009 No. Scottsdale Rd.
(602) 945-7601

✦ **Albuquerque, N. M. 87108**
Neely Enterprises
6501 Lomas Blvd., N. E.
(505) 255-5586

Tucson, Ariz. 85716
Neely Enterprises
232 So. Tucson Blvd.
(602) 623-2564

Las Cruces, N. M. 88001
Neely Enterprises
114 S. Water Street
(505) 526-2486

✦ **Dallas, Texas 75209**
Hewlett-Packard Co.
P.O. Box 7166
3605 Inwood Road
(214) 357-1881 and 332-6667

✦ **Houston, Texas 77027**
Hewlett-Packard Co.
P.O. Box 22813
4242 Richmond Ave.
(713) 667-2407

Huntsville, Ala. 35801
Bivins & Caldwell, Inc.
Holiday Office Center
Suite No. 9
(205) 881-4591

Ottawa, Ontario
Hewlett-Packard (Canada) Ltd.
1762 Carling Avenue
(613) 722-8162

Toronto, Ontario
Hewlett-Packard (Canada) Ltd.
1415 Lawrence Avenue W.
(416) 249-9196

✦ **Chicago, Ill. 60645**
Crossley Associates, Inc.
2501 West Peterson Ave.
(312) 275-1600

✦ **St. Louis, Mo. 63144**
Harris-Hanson Company
2814 South Brentwood Blvd.
(314) 647-4350

✦ **High Point, N. C. 27262**
Bivins & Caldwell, Inc.
1923 N. Main Street
(919) 882-6873

✦ **Atlanta, Ga. 30305**
Bivins & Caldwell, Inc.
3110 Maple Drive, N. E.
(404) 233-1141

✦ **Orlando, Fla. 32803**
Stiles Sales Division
Hewlett-Packard Company
621 Commonwealth Ave.
(305) 425-5541

St. Petersburg, Fla. 33708
Stiles Sales Division
Hewlett-Packard Company
410-150th Ave., Madeira Beach
(813) 391-0211

△ For replacement parts and repair services in the San Francisco area, please contact Hewlett-Packard Company at: 395 Page Mill Road, Palo Alto, California 94306 (415) 326-3950.
✦ Indicates Instrument Repair Stations

HEWLETT-PACKARD COMPANY
1501 Page Mill Road • Palo Alto, California 94304
Tel: (415) 326-7000 • TWX: 415-492-9200 • Cable: HEWPACK

DYMEC DIVISION
395 Page Mill Road • Palo Alto, California 94306
Tel: (415) 326-1755 • TWX: 415-492-9363

BOONTON RADIO COMPANY
Green Pond Road • Rockaway, New Jersey 07866
Tel: Oakwood 7-6400 • Cable: BOONRACO

HARRISON LABORATORIES
41 Industrial Road • Berkeley Heights, N. J. 07922
Tel: 464-1234 • TWX: Summit, N. J.

SANBORN COMPANY
Industrial Division • 175 Wyman St., Waltham, Mass. 02154
Tel: (617) TW 4-6300 • TWX: 617-894-0789

F. L. MOSELEY CO.
409 N. Fair Oaks Ave. • Pasadena, Calif. 91102 • Tel: (213) MUrray 1-0208 • TWX: PASA CAL 7687 • Cable MOCOPAS

OCT. 63

AUTHORIZED SALES AND SERVICE OFFICES IN WESTERN EUROPE

HEWLETT-PACKARD S.A.
54 Route des Acacias
Geneva, Switzerland
Telephone: (022) 42.81.50
Telex: 2.24.86
Cable: HEWPACKSA

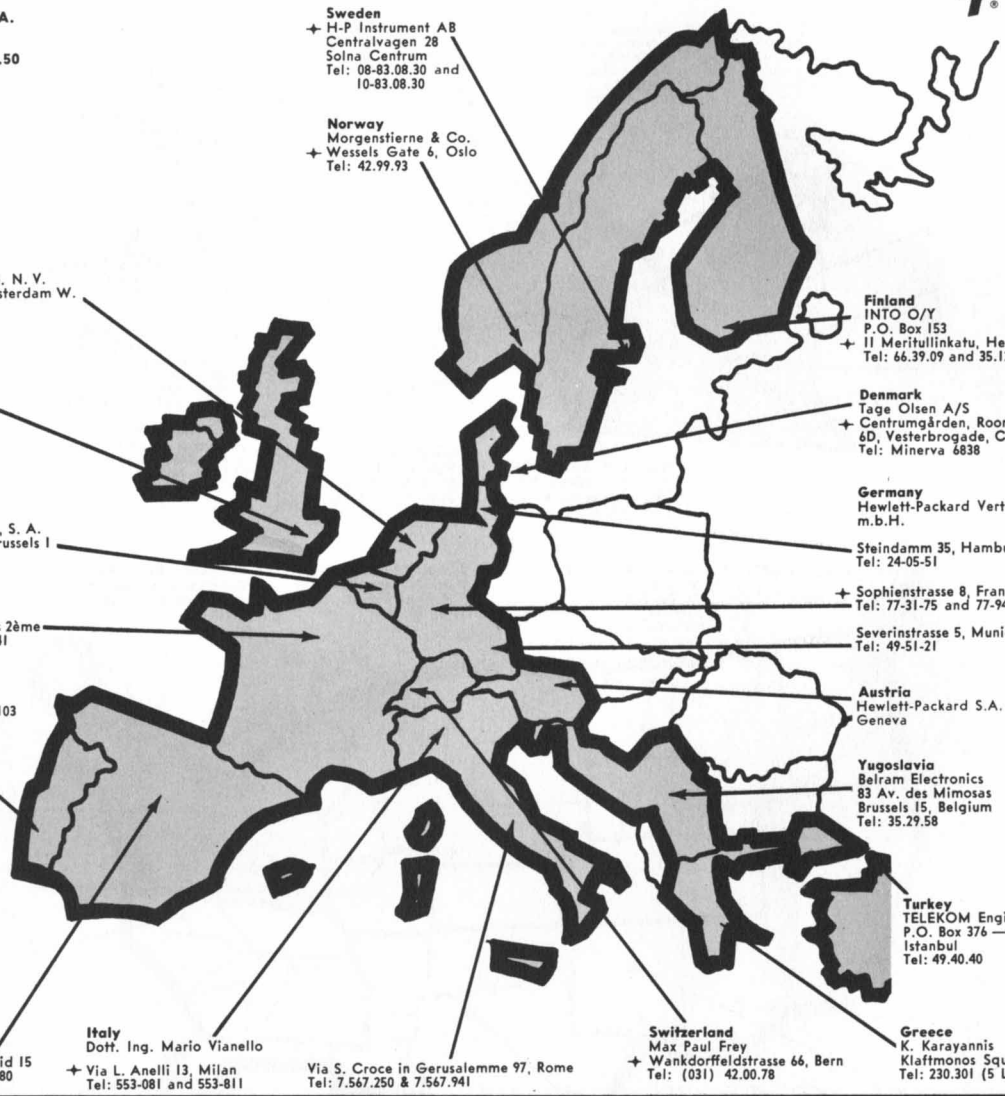

Sweden
✦ H-P Instrument AB
Centralvagen 28
Solna Centrum
Tel: 08-83.08.30 and
10-83.08.30

Norway
Morgenstierne & Co.
✦ Wessels Gate 6, Oslo
Tel: 42.99.93

Netherlands
Electronic Marketing Co. N. V.
✦ 23, Burg. Roellstraat, Amsterdam W.
Tel: 13 28 98 and 13 54 99

United Kingdom
Hewlett-Packard Ltd.
✦ Dallas Road
Bedford, England
Tel: Bedford 68052

Belgium
Electronic Marketing Co., S. A.
✦ 20-24 Rue de l'Hopital, Brussels 1
Tel: 11.22.20

France
Radio Equipements
✦ 65 Rue de Richelieu, Paris 2ème
Tel: RIChelieu 49-88, 95-41

Portugal
TELECTRA
Rua Rodrigo da Fonseca 103
P.O. Box 2531
Lisbon 1
Tel: 68 60 72
68 60 73
68 60 74

Finland
INTO O/Y
P.O. Box 153
✦ 11 Meritullinkatu, Helsinki
Tel: 66.39.09 and 35.125

Denmark
Tage Olsen A/S
✦ Centrumgården, Room 133
6D, Vesterbrogade, Copenhagen V.
Tel: Minerva 6838

Germany
Hewlett-Packard Vertriebsgesellschaft
m.b.H.
Steindamm 35, Hamburg
Tel: 24-05-51
✦ Sophienstrasse 8, Frankfurt am Main 6
Tel: 77-31-75 and 77-94-25
Severinstrasse 5, Munich
Tel: 49-51-21

Austria
Hewlett-Packard S.A.
Geneva

Yugoslavia
Belram Electronics
83 Av. des Mimosas
Brussels 15, Belgium
Tel: 35.29.58

Turkey
TELEKOM Engineering Bureau
P.O. Box 376 — Galata
Istanbul
Tel: 49.40.40

Spain
ATAIO, Ingenieros
A. Aguilera, No. 8, Madrid 15
Tel: 223-27-42 and 254-53-80

Italy
Dott. Ing. Mario Vianello
✦ Via L. Anelli 13, Milan
Tel: 553-081 and 553-811

Via S. Croce in Gerusalemme 97, Rome
Tel: 7.567.250 & 7.567.941

Switzerland
Max Paul Frey
✦ Wankdorffeldstrasse 66, Bern
Tel: (031) 42.00.78

Greece
K. Karayannis
Klaftmonos Square, Athens 124
Tel: 230.301 (5 Lines)

Authorized Sales and Service Offices in Other Areas

Argentina
Mauricio A. Suarez
Telecomunicaciones
Carlos Calvo 224, Buenos Aires
Tel: 30-6312

Australia
Sample Electronics Pty. Ltd.
✦ 9-11 Cremorne Street
Richmond E. 1, Victoria
Tel: 42-4757 (3 lines)

48 Chippen Street, Sydney
New South Wales
Tel: 69-6338 (6 lines)

India
The Scientific Instrument Company, Ld.

6, Tej Bahadur Sapru Road, Allahabad 1
Tel: 2451

240, Dr. Dadabhai Naoroji Road,
Bombay 1
Tel: 26-2642

11, Esplanade East, Calcutta 1

30, Mount Road, Madras 2

B-7, Ajmeri Gate Extn., New Delhi 1
Tel: 26053

Iran
Telecom Ltd.
P. O. Box 1812, Tehran
Tel: 43850

Israel
Electronics & Engineering Ltd.
✦ 16 Kremenetski St., Tel Aviv
Tel: 35021 (3 lines)

Japan
Seki & Company, Ltd.

Chushoku Building
✦ 9 2-chome, Nihonbashi Koami-cho
Chuo-ku, Tokyo
Tel: (860) 4121-5

Sumi Bldg., 106 Umegae-cho
Kita-ku, Osaka
Tel: (362) 8151-5

Korea
American Trading Company, Korea, Ltd.
Song Bo Building
112-35 Sokong-Dong, Seóul
Seóul P.O. Box 1103
Seóul
Tel: 3-7049, 3-7613

New Zealand
Sample Electronics (N. Z.) Ltd.
8 Matipo Street
Onehunga S. E. 5, Auckland
Tel: 565-361

Puerto Rico & Virgin Islands
San Juan Electronics, Inc.
P.O. Box 5167
Pta. de Tierra Sta., San Juan
Tel: 722-3342, 724-4406

South Africa
F. H. Flanter & Co. (Pty.), Ltd.
Rosella House
Buitencingle Street, Cape Town
Tel: 3-3817

Taiwan (Formosa)
Hwa Sheng Electronic Co., Ltd.
21 Nanking West Road, Taipei
Tel: 4-6076, 4-5936

FOR SALES AND SERVICE ASSISTANCE IN AREAS NOT LISTED CONTACT:

International Marketing Department
Hewlett-Packard Company
✦ 1501 Page Mill Road
Palo Alto, California 94304, U.S.A.
Telephone: (415) 326-7000
TWX: 415-492-9200
Telex: 033811
Cable: HEWPACK

✦ Indicates Instrument Repair Stations

OCT. 63

175A-901

PRINTED IN U.S.A.